PARTS FOR 10L30 AND 10L40 KITS

Use these exploded drawings to find the part number.
Then look up its number in the catalog portion on the reverse for details.

An asterisk (*) next to a number indictates that a Factory Team option is available.
See the **Factory Team** section for details.

Indicates part for 10L3 Oval only: L30 8303
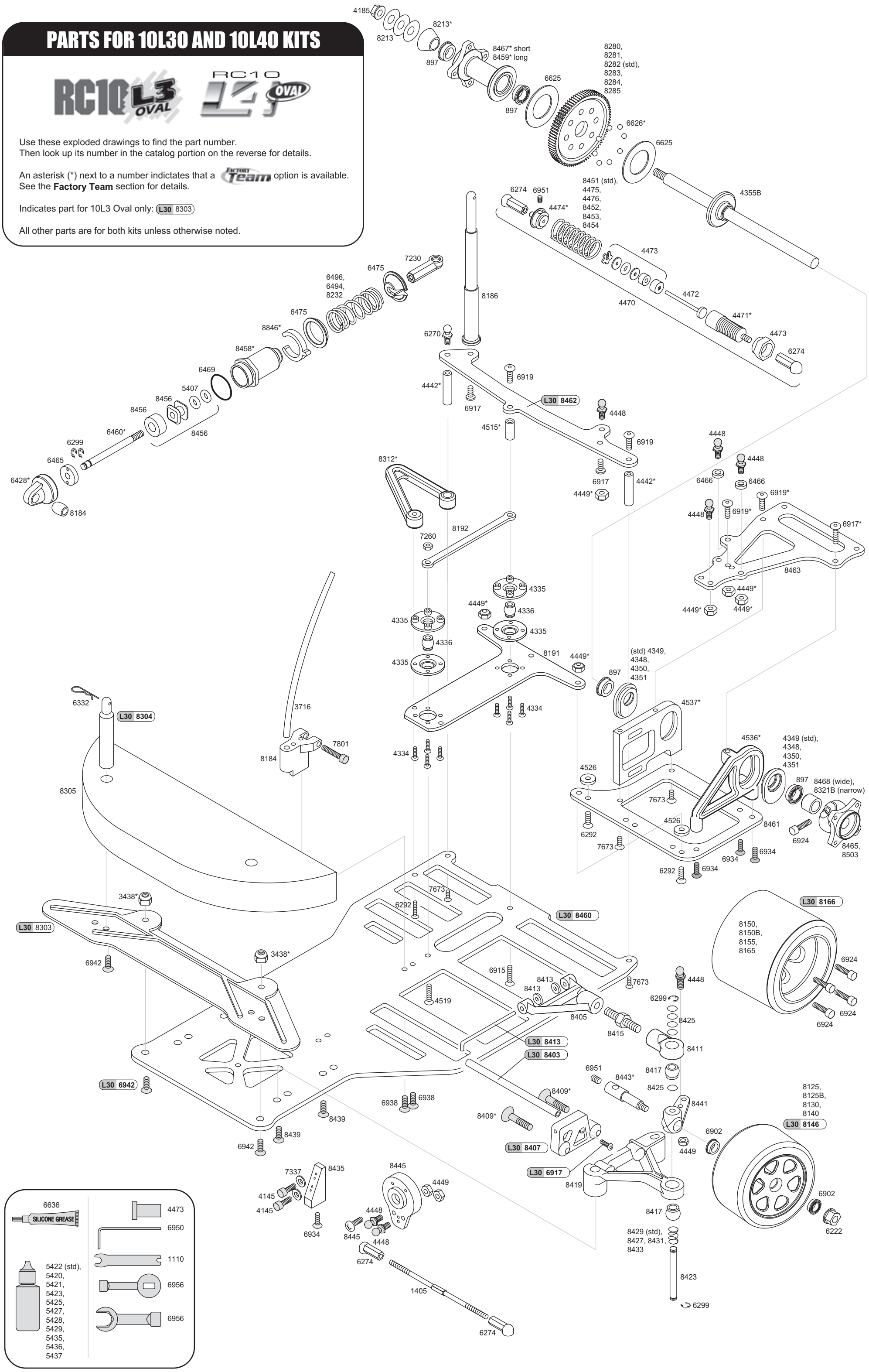
All other parts are for both kits unless otherwise noted.