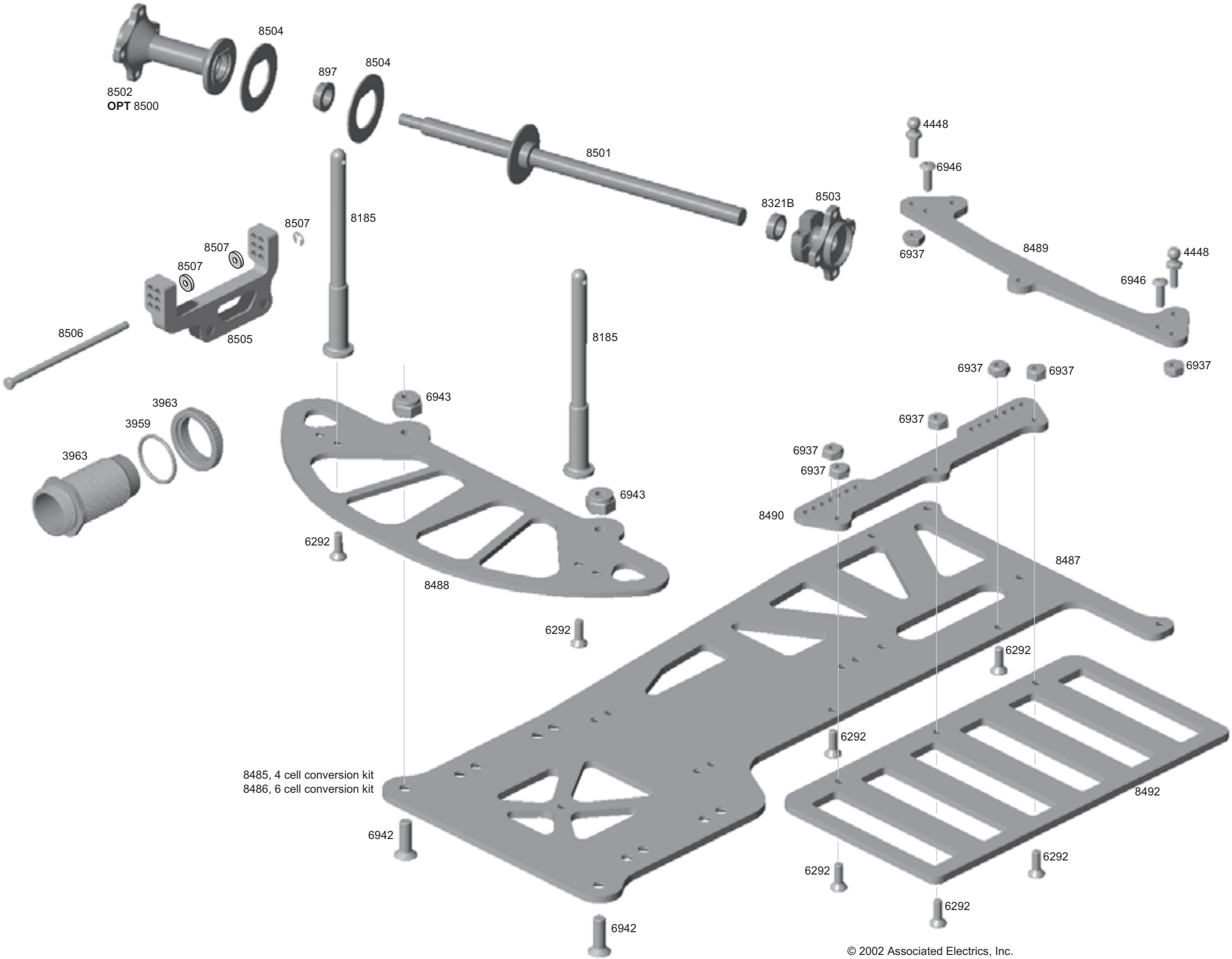

© 2002 Associated Electrics, Inc.
Due to continual R&D, some parts may not reflect kit contents.
This drawing is for finding parts in the catalog. Do not use this to assemble your kit.