DURATRAX®

Mini QUAKE SE™

Length: 9.5" [240mm]
Width: 7.4" [185mm]
Height: 4.7" [120mm]
Ground Clearance: 1.25" [32mm]
Weight: 25 oz [725g] approx. running weight with battery/motor/ESC

Technical Support Information
For technical assistance, contact:
DuraTrax Product Support
3002 N. Apollo Drive, Suite 1
Champaign, IL 61822
(217) 398-8970, Ext. 5
carsupport@duratrax.com

ASSEMBLY AND OPERATION MANUAL

Warranty

- DuraTrax will warranty this kit for 90 days after the purchase date from defects in materials or workmanship. DuraTrax will either repair or replace, at no charge, the incorrectly made part.
- Make sure you save the receipt or invoice you were given when you purchased your model. It is your proof of purchase and we must see it before we can honor the warranty.
- To return your Mini Quake SE for repairs covered under warranty you should send your model to:

Hobby Services
3002 N. Apollo Drive Suite 1
Champaign, Illinois 61822
Attn: Service Department
Phone: (217) 398-0007 9:00 am-5:00 pm Central Time M-F
E-mail: *hobbyservices@hobbico.com*

If the buyer is not prepared to accept the liability associated with the use of this product, the buyer is advised to return this kit immediately in new and unused condition to the place of purchase.

READ THROUGH THIS MANUAL BEFORE STARTING CONSTRUCTION. IT CONTAINS IMPORTANT INSTRUCTIONS AND WARNINGS CONCERNING THE ASSEMBLY AND USE OF THIS MODEL.

DTXZ1111 For Kit DTXC0011

TABLE OF CONTENTS

INTRODUCTION

Thank you for purchasing the DuraTrax Mini Quake SE. This manual contains the instructions you need to build, operate and maintain your new electric R/C vehicle. Read over this manual thoroughly before building or operating the Mini Quake SE.

SAFETY PRECAUTIONS

When the safety precautions are followed, the Mini Quake SE will provide years of enjoyment. Use care and good sense at all times when operating this radio controlled vehicle. Failure to use this vehicle in a safe, sensible manner can result in injury or damage to property. You and you alone must insure that the instructions are carefully followed and all safety precautions are obeyed.

- Do not operate the Mini Quake SE near people. Spectators should be behind the driver or at a safe distance away from the vehicle.
- Make sure to read the instructions before charging the battery.
- Do not leave the charger unattended during charging. If the battery or charger become hot at any time, disconnect the battery from the charger immediately! Failure to do so may cause permanent damage to the charger and battery and may cause bodily harm.
- Do not cover the charger during charging. This may cause the charger to overheat.
- Do not allow the electronic speed control (ESC) or radio equipment to come into contact with moisture. Water can cause the electronics to short out and cause permanent damage.
- Always turn on the transmitter before turning on the electronic speed control.
- Before turning on your radio, check to make sure that no one else is running on the same frequency as your Mini Quake SE.

HELPFUL HINTS

- Avoid working over a deep pile carpet. If you drop a small part or screw, it will be difficult to find.
- Place a mat or towel over your work surface. This will prevent parts from rolling off and will protect the work surface.
- Test fit all parts before attaching them permanently.

STRESS-TECH™ PARTS GUARANTEE

We have engineered the Mini Quake SE to take the rough and tumble abuse that makes R/C fun. We are so confident of the quality and durability of the Stress-Tech plastic parts that we will replace any Stress-Tech plastic part you break during the first 12 months you own the vehicle. Just send in the part to us and we will send you a FREE replacement. Please see the Mini Quake SE parts list for the items covered under the Stress-Tech guarantee.

To receive your free replacement part, please send the following to the Hobby Services address listed on the front cover of this manual.

❏ 1. The broken part must be included.
❏ 2. The part number and description of the broken part.
❏ 3. Copy of your dated invoice or purchase receipt.
❏ 4. Your name, phone number and shipping address.

REPAIR SERVICE

Repair service is available anytime.

- After the 90 day warranty, you can still have your Mini Quake SE repaired for a small charge by the experts at DuraTrax's authorized repair facility, Hobby Services, at the address listed on the front cover of this manual.

- To speed up the repair process, please follow the instruction listed below.

❏ 1. Under most circumstances return the ENTIRE vehicle. The exception would be sending in a Stress-Tech part. See the instruction under the Stress-Tech Guarantee.

❏ 2. Make sure the transmitter is turned off and all of the batteries are removed.

❏ 3. Send written instructions which include: a list of all items returned, a THOROUGH explanation of the problem, the service needed and your phone number during the day. If you expect the repair to be covered under warranty, be sure to include a proof of date of purchase (your store receipt or purchase invoice).

❏ 4. Also be sure to include your full return address.

SPECIFICATION & DESCRIPTION CHANGES

All pictures, descriptions and specifications found in this instruction manual are subject to change without notice. DuraTrax maintains no responsibility for inadvertent errors in this manual.

ITEMS REQUIRED FOR COMPLETION

❏ 6-Cell Mini Quake Battery (DTXC2196)
❏ Charger (DTXC4005)
❏ Radio system with one servo (FUTJ13**)
❏ Electronic Speed Control (DTXM1260)
❏ 380-Size Motor (DTXC3307)

MOTOR INSTALLATION

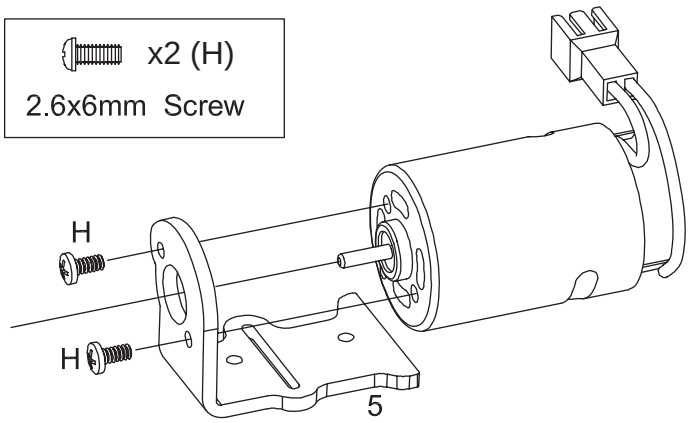

❏ 1. Using (2) 2.6x6mm (H) screws, secure your motor (not included) onto the Mini Quake SE's motor mount (5).

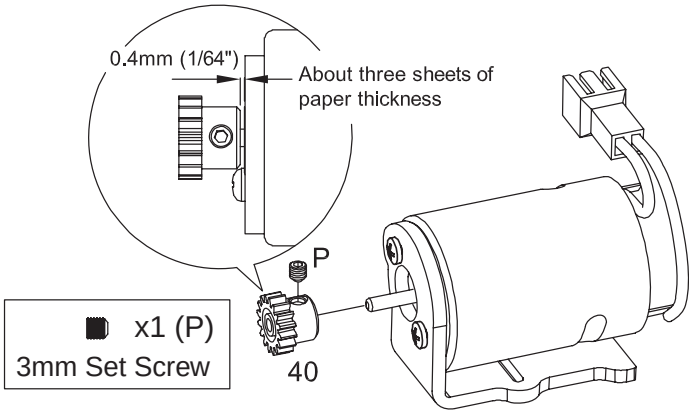

❏ 2. Install the included 16 tooth pinion (40) onto the motor shaft and secure it to the motor shaft with a 3mm set screw (P).

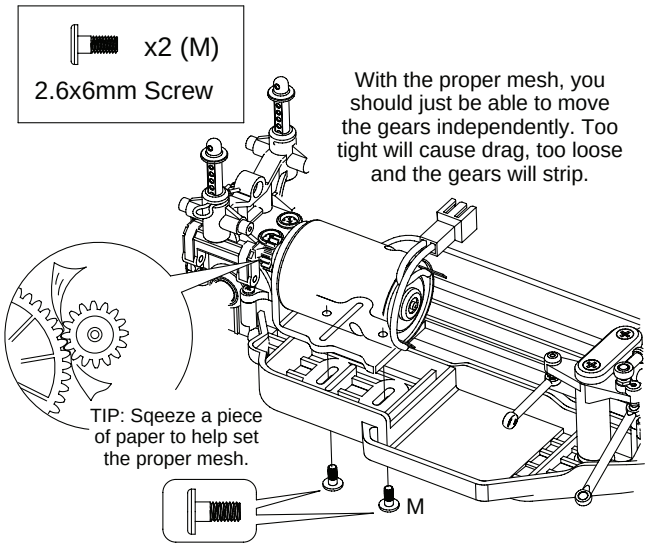

❏ 3. Install the motor assembly onto the chassis (1). Secure the motor mount (5) to the chassis using (2) 2.6x6mm (M) screws. Before tightening the 2.6x6 screws, make sure the gear mesh between the motor pinion (40) and the spur gear (39) is set correctly. With a properly set gear mesh, you can hold the pinion and still be able to slightly rock the spur gear teeth back and forth in the pinion gear. Be careful not to set the gear mesh too loose. It will cause the spur gear to strip. Setting the gear mesh too tight will cause binding and could damage your motor and speed control.

❏ 4. Once the gear mesh is properly set, tighten the 2.6x6mm (M) screws to secure the motor assembly in place.

SERVO INSTALLATION

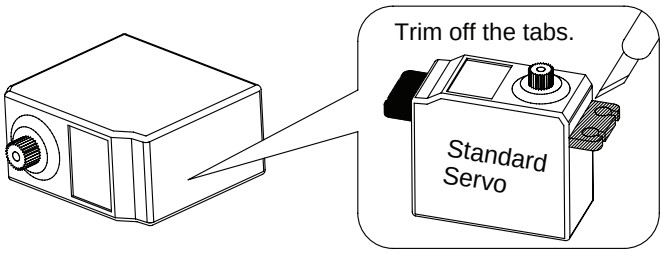

❏ 1. For standard size servos, you will need to trim the mounting tabs off the sides of the servo. **TIP:** Use Lexan® scissors to trim the mounting tabs from the servo. Carefully, use a sharp hobby knife blade to clean up the remaining portion of the mounting tab.

❏ 2. Locate the correct servo horn (30). There are multiple servo horns included with the Mini Quake SE to fit different brands of servos. **NOTE:** The correct servo horn should slide on, without forcing it, onto the servo output shaft.

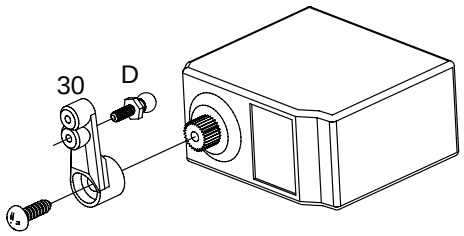

❏ 3. Install a 3.8mm ball (D) into the lower hole of the servo horn (30) as shown in the drawing.

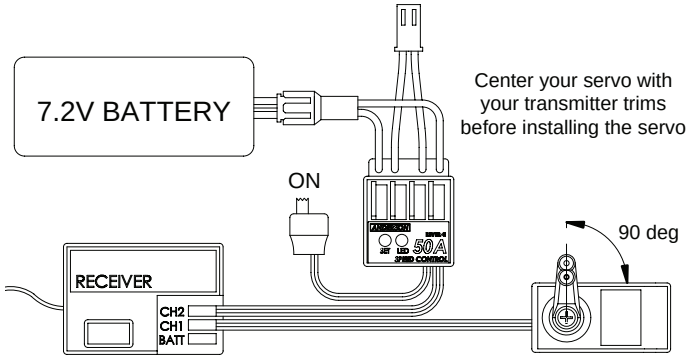

❏ 4. Center the trim of the servo. You will need to hook up the servo, receiver, speed control, and charged battery for this. Center the trims on the transmitter. Then turn the transmitter on followed by the speed control. See your radio instructions for location of the steering servo trim.

❏ 5. Make sure the servo is positioned properly (note the output shaft orientation in the drawing) and install the servo horn (30) onto the servo as shown. Secure the servo horn (30) to the servo using the screw included with the servo.

❏ 6. Install the piece of included double-sided tape (S) onto the bottom of the servo. **TIP:** Thoroughly clean the bottom of the servo with rubbing alcohol. This wiil help ensure a good bond between the servo and the double-sided tape.

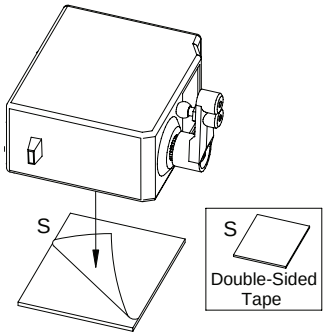

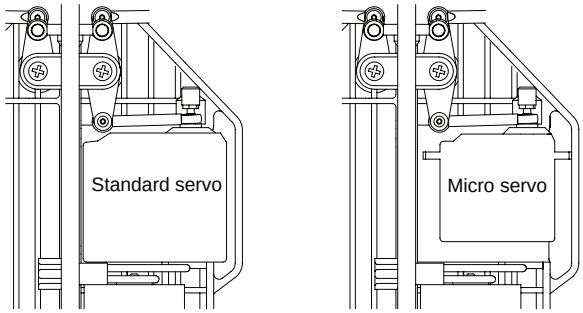

Typical steering servo installation.

❏ 7. Test fit the servo into the chassis so you know where it needs to be mounted. Hold the servo in place and rotate the steering back and forth. Make sure the linkage does not bind.

❏ 8. Remove the remaining protective backing from the double-sided tape and install the servo into the chassis. **TIP:** Thoroughly clean the chassis with rubbing alcohol. This wil help ensure a good bond between the chassis and the double-sided tape.

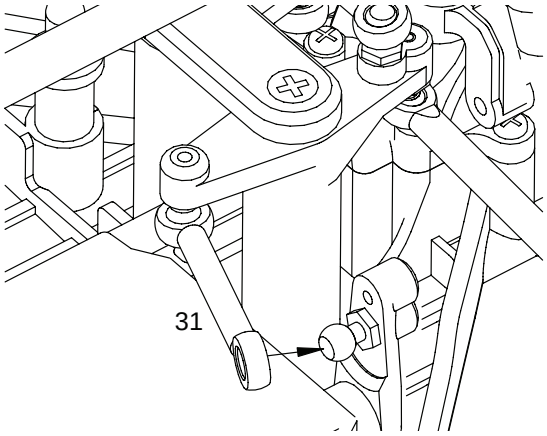

❏ 9. Attach the steering linkage connecting rod (31) to the 3.8mm ball (D) that was installed into the servo horn.

RECEIVER INSTALLATION

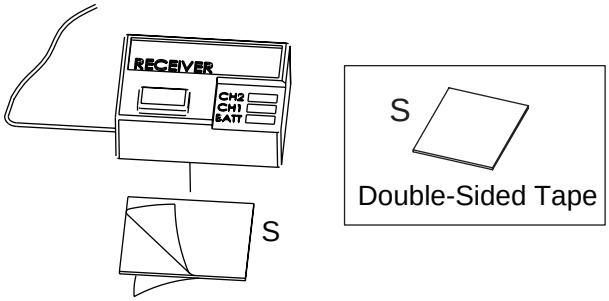

❏ 1. Install a piece of double-sided tape (S) onto the bottom of your receiver. **TIP:** Thoroughly clean the receiver with rubbing alcohol.

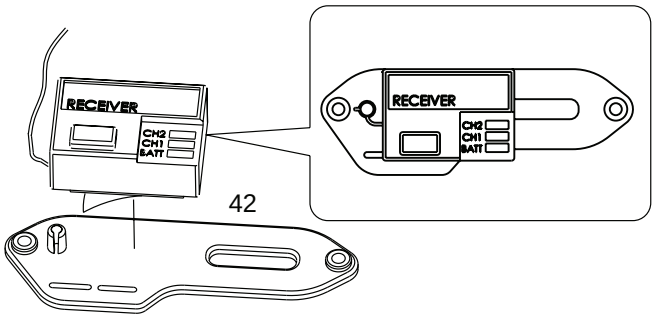

❏ 2. Install the receiver onto the wide portion of the battery strap (42) as shown in the drawing. Make sure the receiver is positioned so that the receiver antenna is pointing toward the antenna mount. **TIP:** Thoroughly clean the receiver with rubbing alcohol.

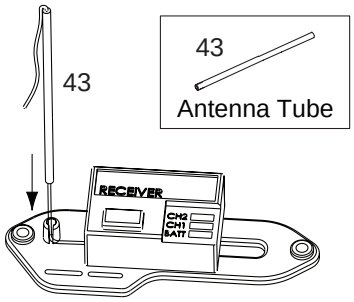

IMPORTANT: Never cut the receiver antenna!
Doing so will severely reduce your range.

❏ 3. Run the receiver antenna wire through your fingers several times to straighten it and then install it into the antenna tube (43). A small amount of soapy water may also be used to help get the antenna through the tube.

❏ 4. Leave a small amount of slack between the receiver and the antenna mount and install the antenna tube (43) into the antenna mount molded on the battery strap (42).

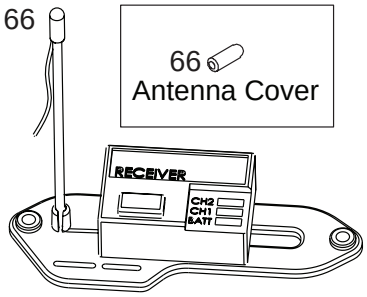

❏ 5. Secure the antenna to the antenna tube (43) using the antenna cover (66).

SPEED CONTROL INSTALLATION

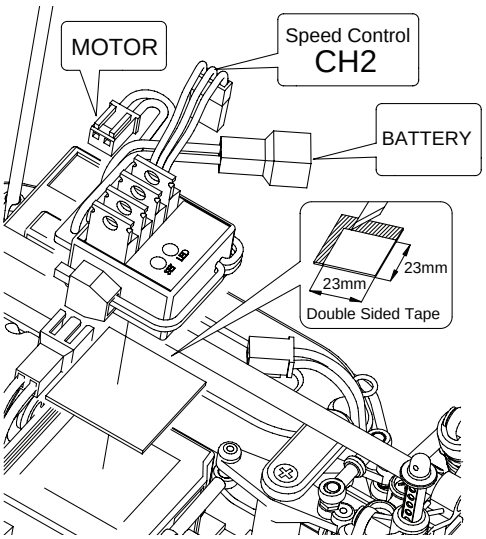

❏ 1. Install a piece of double-sided tape (S) onto the bottom of your speed control.
❏ 2. Remove the protective backing from the double-sided tape and install the speed control onto the top of the servo as shown in the drawing.

❏ 3. Make sure the wires are not too close to the drive shaft (17). They could get caught in the shaft and become damaged.

❏ 4. Refer to the instructions that came with your speed control for proper setup.

FINISHING THE MINI QUAKE SE

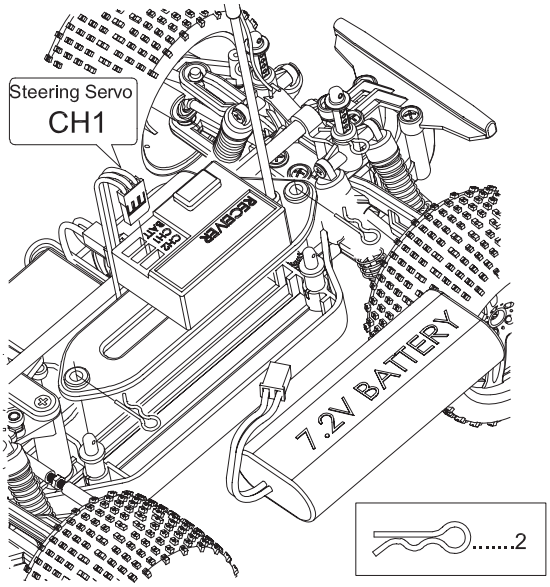

❏ 1. Remove the body clips from the battery holder and insert the charged 6-cell battery pack into the chassis.

❏ 2. Re-install the battery clips onto the battery holder.

❏ 3. Turn the transmitter on, then the receiver. **NOTE: Always turn your transmitter on first.** Gently pull back on the throttle trigger. The Mini Quake SE should slowly move forward. If the Mini Quake SE goes in reverse, move the throttle reversing switch on the transmitter to the opposite position. After doing this, the throttle trim may need to be adjusted to find the throttle's neutral point. See radio instructions.

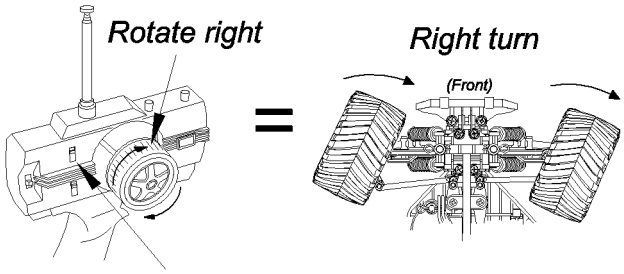

❏ 4. Now, check that the steering reversing switch is set properly. With the transmitter wheel facing you and the truck facing away from you, turn the transmitter steering wheel to the right. The wheels of the truck should turn so that when the truck moves it will turn to the right. If it turns to the left, the steering servo reversing switch needs to be moved to the opposite position. After reversing the steering, the steering trim on the transmitter may need to be adjusted to center the steering of the truck.

PAINTING THE BODY

The Mini Quake SE body comes clear. Below are a few tips to follow when painting your Mini Quake SE body.

CAUTION:
- **Always paint in a well-ventilated area.**
- **Never paint near an open flame.**

❏ 1. Wash the inside of the body out with dish soap and water. Make sure the body is thoroughly rinsed out.
❏ 2. Install the included window masks into the inside of the body. Make sure the edges are well sealed to the body to prevent leaks.
❏ 3. Use a quality masking tape or Hobbico® Liquid Mask to mask the inside of the body off.
❏ 4. If using masking tape, make sure it is properly sealed down.
❏ 5. If using Hobbico Liquid Mask, make sure to use multiple coats. Make sure not to put the liquid mask on too thick or too thin. 2-3 medium coats work best.
❏ 6. Use a new hobby blade when cutting the masking tape or liquid mask.
❏ 7. Paint the inside of the body using a quality Lexan compatible paint. Spray dark colors first and always back light colors with white or silver.
❏8. Decal the body as desired and install it onto the chassis, securing it in place with the four included body clips.

For additional painting tips, please visit the following websites:

www.rccaraction.com/articles/htshake_1.asp
www.rctech.net/articles/painting_hauntedmyst.shtml
www.rcxotic.com/pkg-how/000002/index.shtml

RUNNING AND MAINTENANCE TIPS

BEFORE EACH RUN
- Make sure the batteries in the transmitter are charged.
- Make sure there are no loose or damaged parts on the kit.
- Check the drive train for binding that could cause possible damage to the kit or the electronics.
- Check that the ESC and receiver are properly secured to the chassis.
- Check to make sure all wires are properly secured.

AFTER EACH RUN
- Clean any large globs of dirt, carpet fuzz or any other debris from the chassis.
- Disconnect and remove the battery from the Mini Quake SE.
- Check for any broken or damaged parts. This way parts may be replaced before the next run.

AFTER EVERY 10 RUNS
- Check to make sure the bearings are free of debris.
- Check for a smooth gear mesh.
- Check the tires to make sure they are still properly glued to the wheels.

TUNING

RIDE HEIGHT ADJUSTMENT
The ride height of the Mini Quake SE is easily adjusted by using the included pre-load spacers (67). To increase the ride height of the Mini Quake SE, install a pre-load spacer onto each of the shock bodies between the spring and the shock cap. The more pre-load clips you install, the more ride height you will achieve. Make sure you install the same amount of pre-load clips to each of the shocks. To lower the ride height of the Mini Quake SE, remove the desired amount of pre-load spacers from the shocks. **TIP:** Rough, rocky surfaces require higher ride height; flat, smooth surfaces allow a lower ride height.

PINIONS
The Mini Quake SE comes stock with the 16 tooth pinion. To obtain higher top speeds you can install a larger pinion gear onto the motor. This will, however, decrease your acceleration and run time. **TIP:** Smaller pinion equals more torque, less top speed. Larger pinion equals more top speed, less torque.

SPURS
DuraTrax offers two different spur gear options for the Mini Quake (a 45-tooth spur gear is included with the Mini Quake SE): 40-Tooth (DTXC7409) and 49-Tooth (DTXC7432). The 40-tooth will give increased top speed, but decrease torque, the 49-tooth will increase torque but decrease top speed.

SHOCK MOUNT LOCATION
There are three different lower shock mounting positions on the Mini Quake SE. For jumping and climbing, the best location is the inner most hole of suspension arm. This makes the truck's suspension feel softer. For racing and surfaces with more traction, the best location is the outer most hole. This location gives the truck's suspension a stiffer feel and allows less chassis roll in the corners. The middle is a good all around location. **Tip:** Make sure the front shocks are all in the same location and make sure all of the rear shocks are all in the same location. They do not have to be in the same location from front to rear.

SHOCK OIL
The Mini Quake SE comes stock with 25 weight oil in the shocks. The handling of the truck can be tuned by changing the shock oil to either heavier (bigger number) or lighter (lower number.) By putting heavier oil in the shocks, the truck will have less chassis roll and become less responsive. Putting lighter oil in the shocks will cause the truck to be more responsive and have more chassis roll. For smooth, flat surfaces, a thicker oil would be best. For surfaces that are rough or have jumps, a lighter oil would be best.

SHOCK SPRINGS
DuraTrax offers three different shock springs: Soft (gray), Medium/Stock (white) and Heavy (yellow). For rutted tracks with small jumps, a soft spring should be used. For tracks with large jumps, a heavy spring should be used to help prevent chassis slap.

BALL DIFFERENTIAL ASSEMBLY

❏1. Install a 6x10 bearing (61) onto the diff outdrive 1 (44).

❏2. Install diff outdrive 1 (44) into diff plate holder 1 (45).

❏3. Install a diff plate (46) onto the diff plate holder 1 (45).

❏4. Install a 4x7mm bearing (49) onto the diff plate holder 1 (45). Then install the differential main gear (47).

❏ 5. Apply grease to each of the 12 differential balls (48) and install them into the differential main gear (47).

❏6. Install a second 4x7mm bearing (49) onto the diff plate holder (45).

❏7. Install the other differential plate (46) onto the differential plate holder 2 (69).

❏8. Install a differential thrust plate (71) onto the differential bolt (73).

❏9. Place a generous amount of diff grease (not included) onto the differential thrust plates (71). Then install six differential balls (48) onto the diff thrust plate (71).

❏10. Next install the second differential thrust plate (71) onto the differential bolt (73).

❏11. Install a rubber spacer (70) onto the differential bolt (73) and slide it up against the differential plate (71).

❏ 12. Apply threadlocking compound on the diff bolt (73) threads and install the diff bolt into the diff plate holder (69).

❏ 13. Carefully install the diff outdrive inner side 2 (75) onto the diff plate holder side 2. **Note: This will hold the thrust balls in place when you tighten the differential bolt.**

❏ 14. Install a 6x10mm bearing (61) onto the diff outdrive outer side 2 (75). Then install the diff outdrive outer (75) into the diff outdrive inner (74). Secure the pieces together by installing a 5mm E-clip (C).

Using a 1.5mm hex wrench, gently tighten the differential bolt (73). Tighten the bolt until it becomes snug. Then back it off 1/16 of a turn. **Note: Do not over tighten the bolt. It could damage the differential balls and differential plates. The differential bolt may need to be tightened after the first couple of runs. This is due to the parts wearing in.**

BALL DIFFERENTIAL TUNING

You can use the adjustable ball diffs to tune your truck's handling. Tightening the ball diff will increase forward traction, but decrease cornering. **TIP:** Be sure not to overtighten or loosen the ball diff. Overtightening will put flat spots on the balls, causing excess drag. Too loose of a setting will make the differential slip and overheat.

ASSEMBLY GUIDE

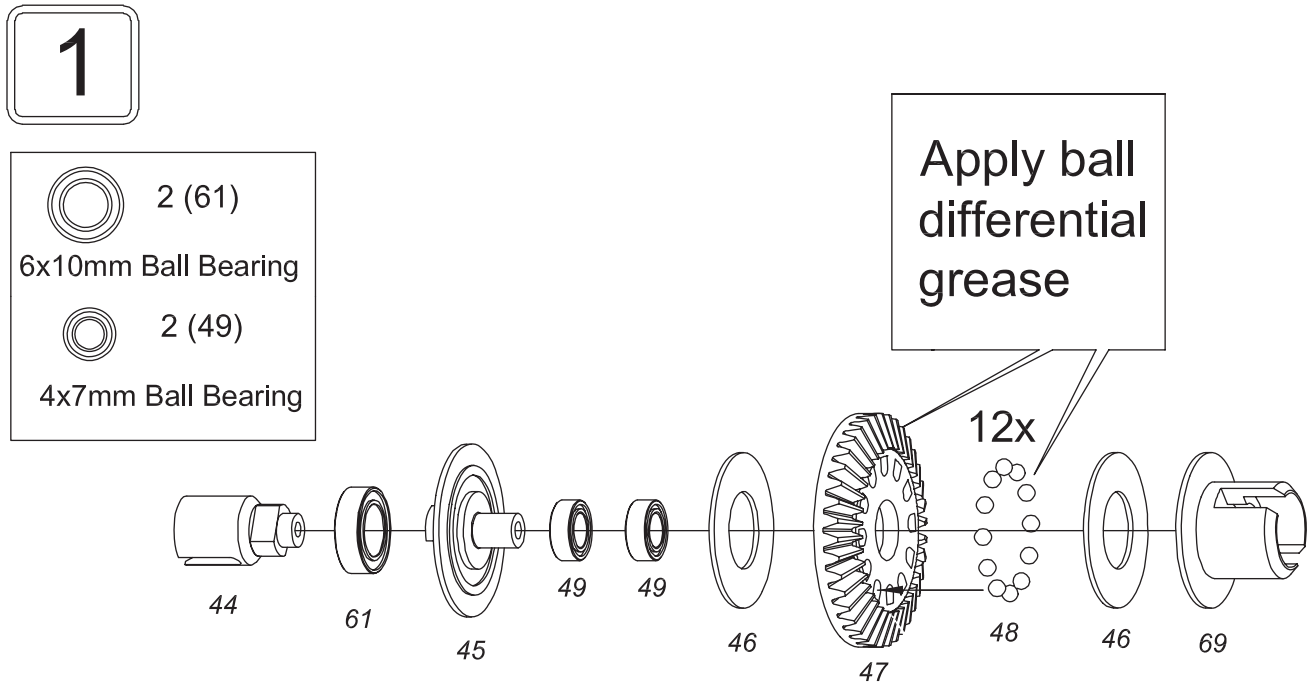

2

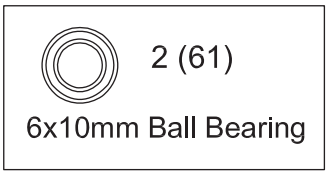

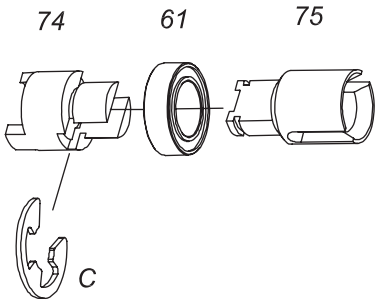

3

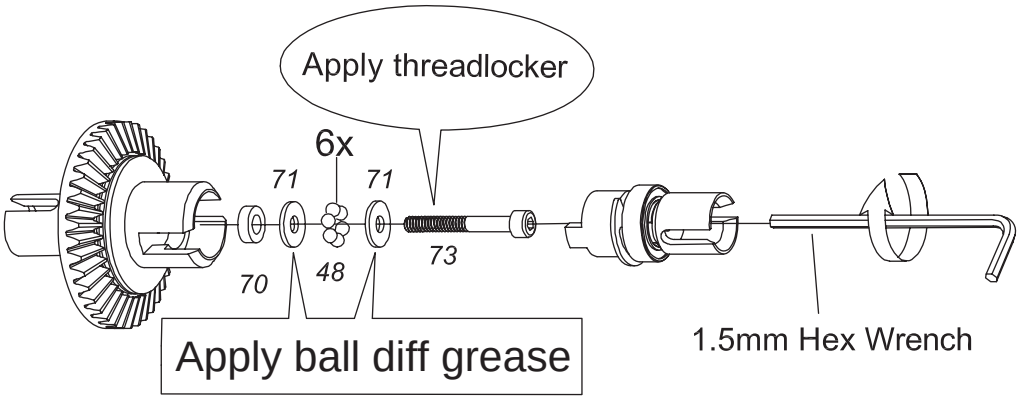

4

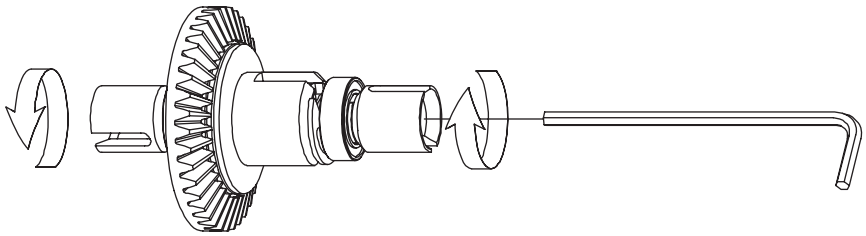

Using a 1.5mm hex wrench, gently tighten the differential bolt (73) until it becomes snug. Then back it off 1/16 of a turn.

Note: Do not overtighten the bolt. It could damage the differential balls and differential plates. The differential bolt may need to be tightened after the first couple of runs. This is due to parts wearing in.

5

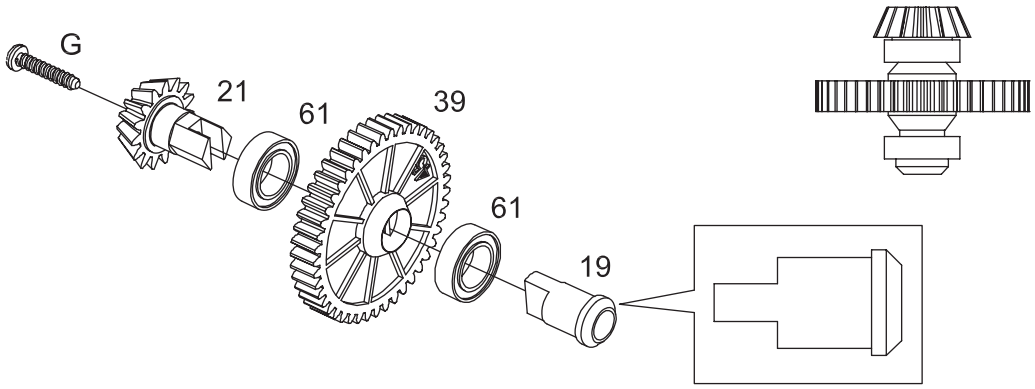

2 (61)
6x10mm Ball Bearing

1 (G)
2x10mm ST Screw

6

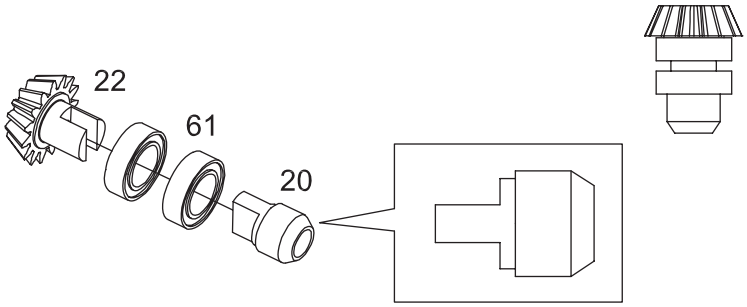

2 (61)
6x10mm Ball Bearing

7

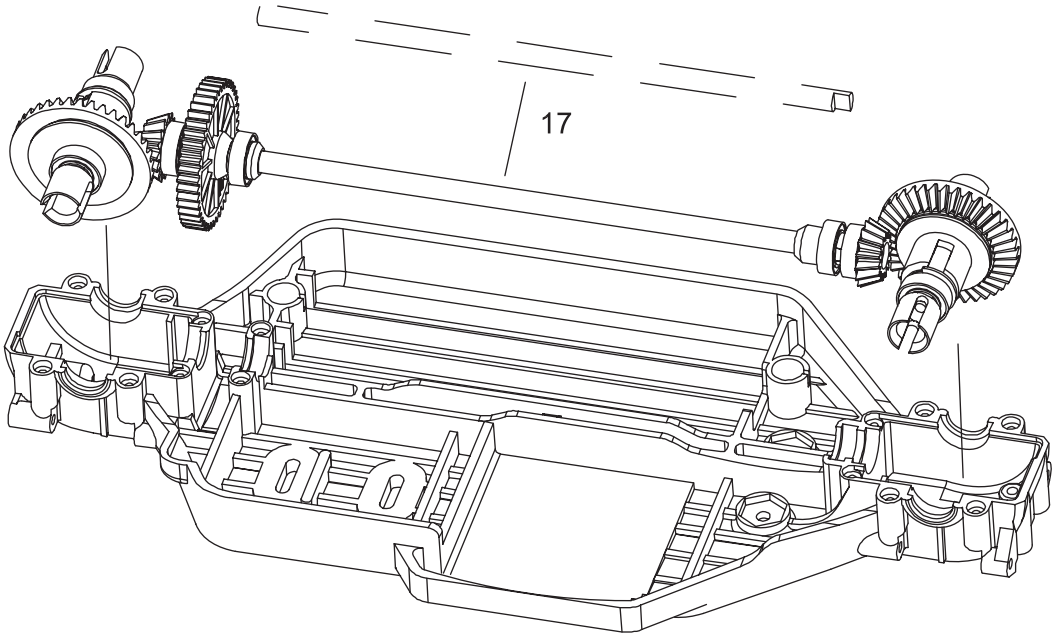

8

14 (G)
2x10mm ST Screw

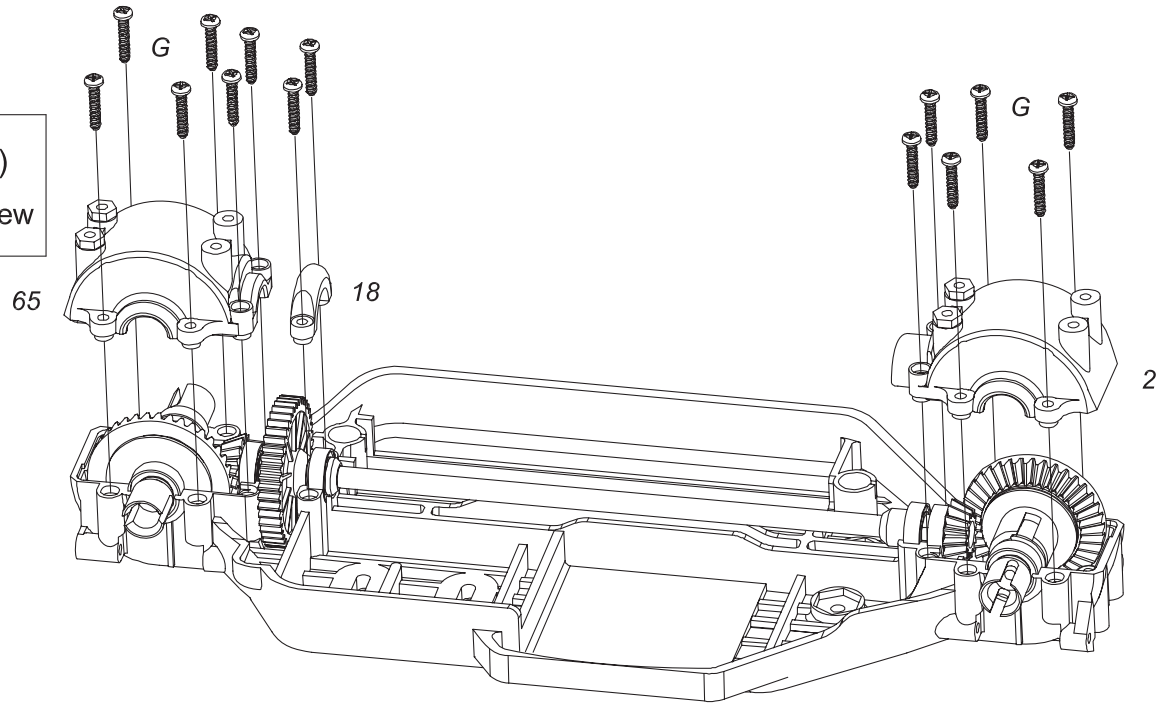

9

2 (O)
2.6x10mm ST Screw

2 (K)
2.6x8mm Screw

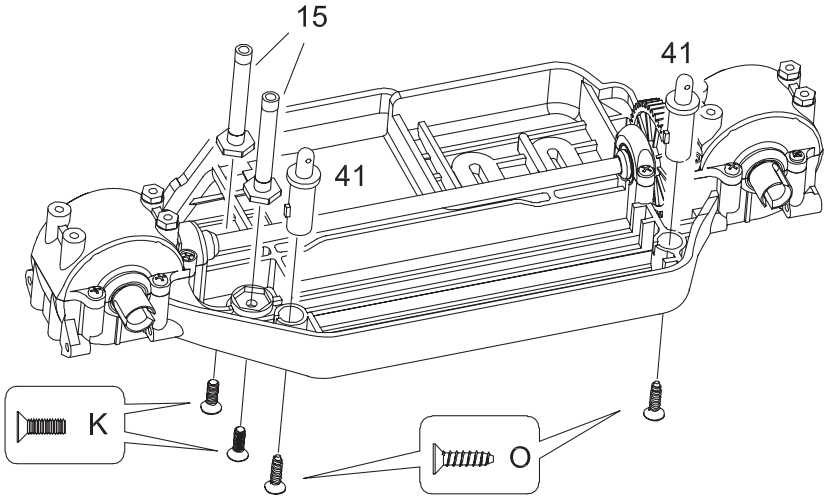

10

3 (D)
3.8mm Ball Stud

62
4x7mm Bushing

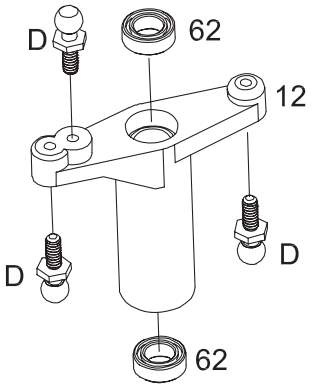

11

2 (D)
3.8mm Ball Stud

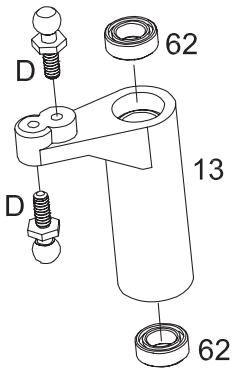

12

2 (K)
2.6x8mm Screw

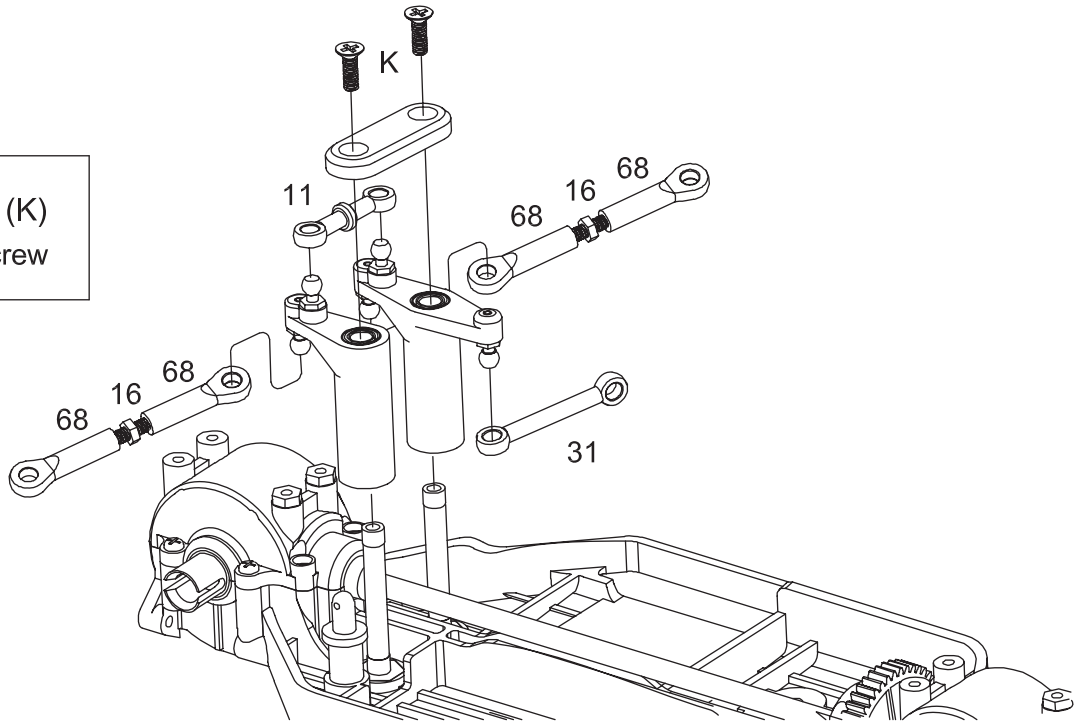

13

4 (O)
2.6x10mm ST Screw

4 (34)

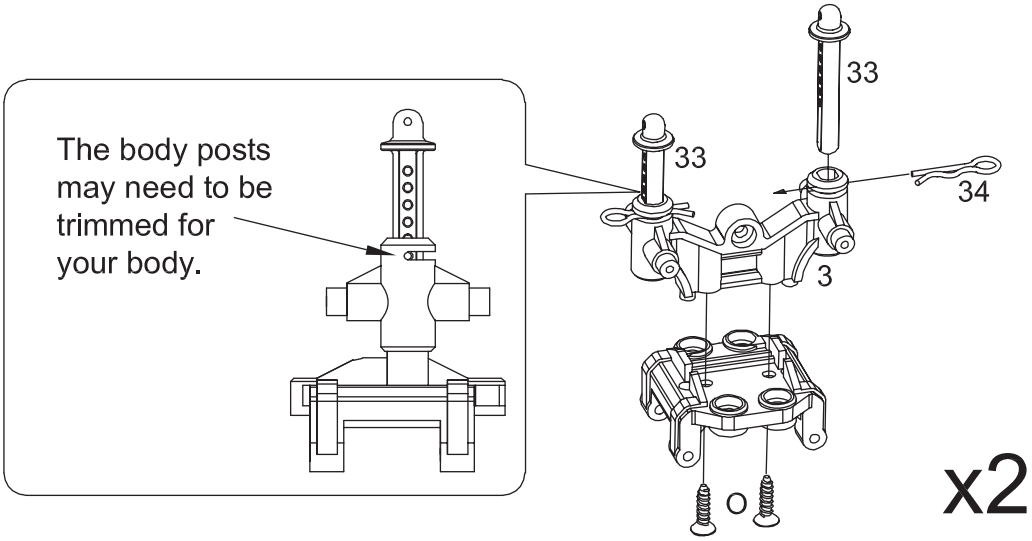

14

4 (A)
2.6x8mm ST Screw

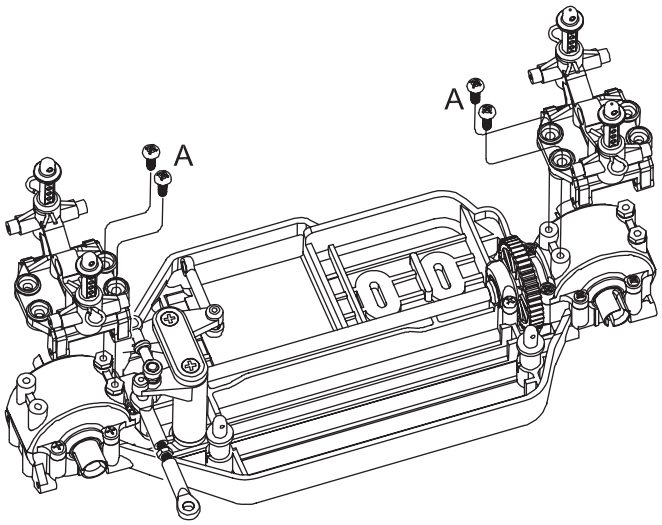

15

2 (H)
2.6x6mm Screw
1 (P)
3mm Set Screw

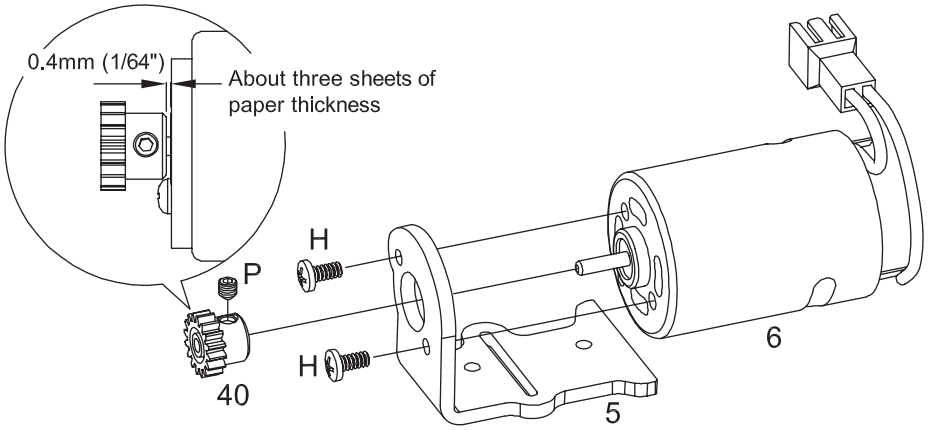

16

2 (H)
2.6x6mm Screw
2 (M)
2.6x6mm Screw

With the proper mesh, you should just be able to move the gears independently. Too tight will cause drag, too loose and the gears will strip.

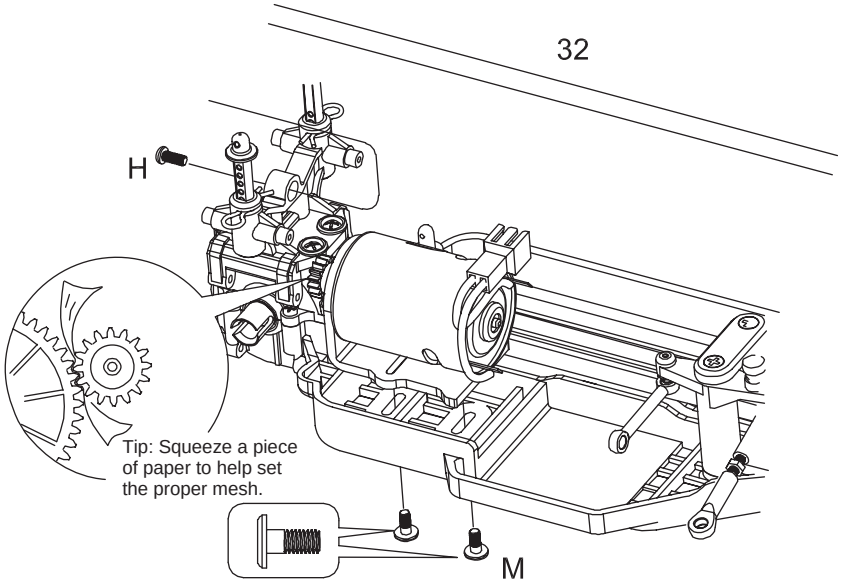

17

4 (61)
6x10mm Ball Bearing

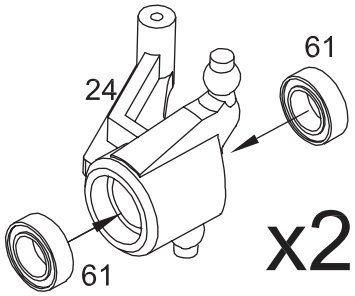

18

4 (61)
6x10mm Ball Bearing

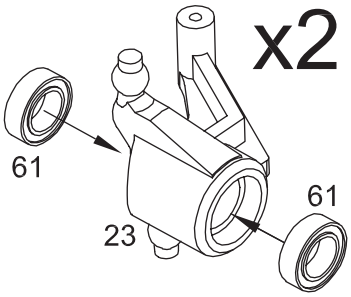

19

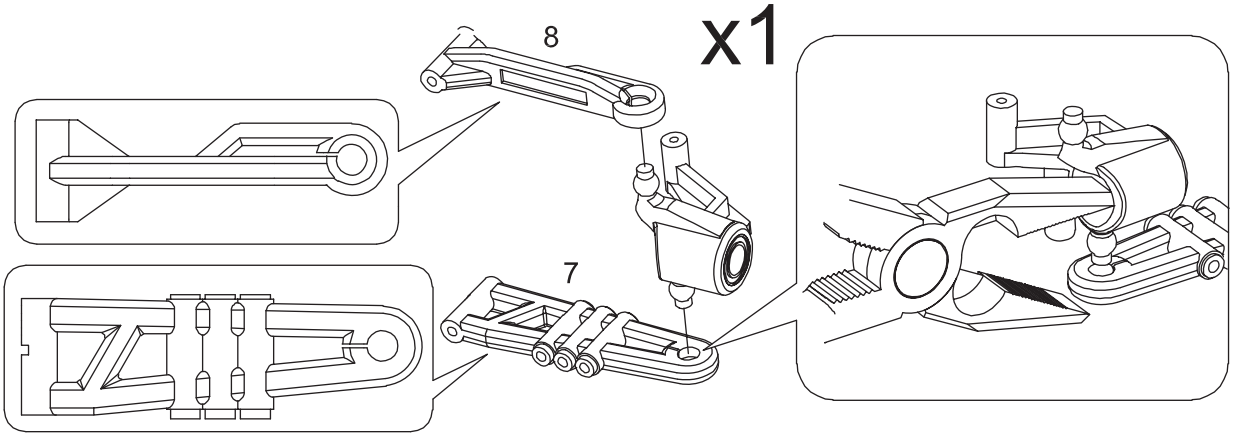

20

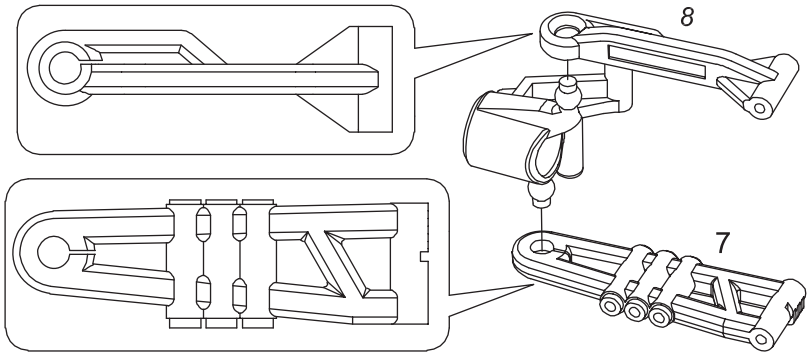
8
7

x1

21

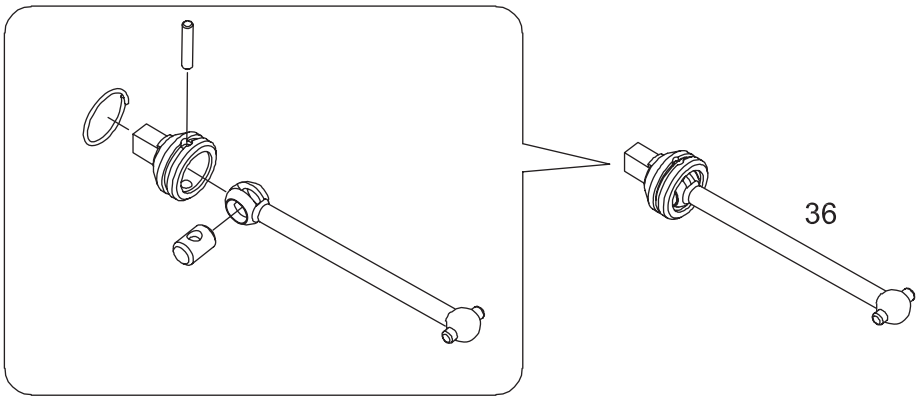
36

x4

22

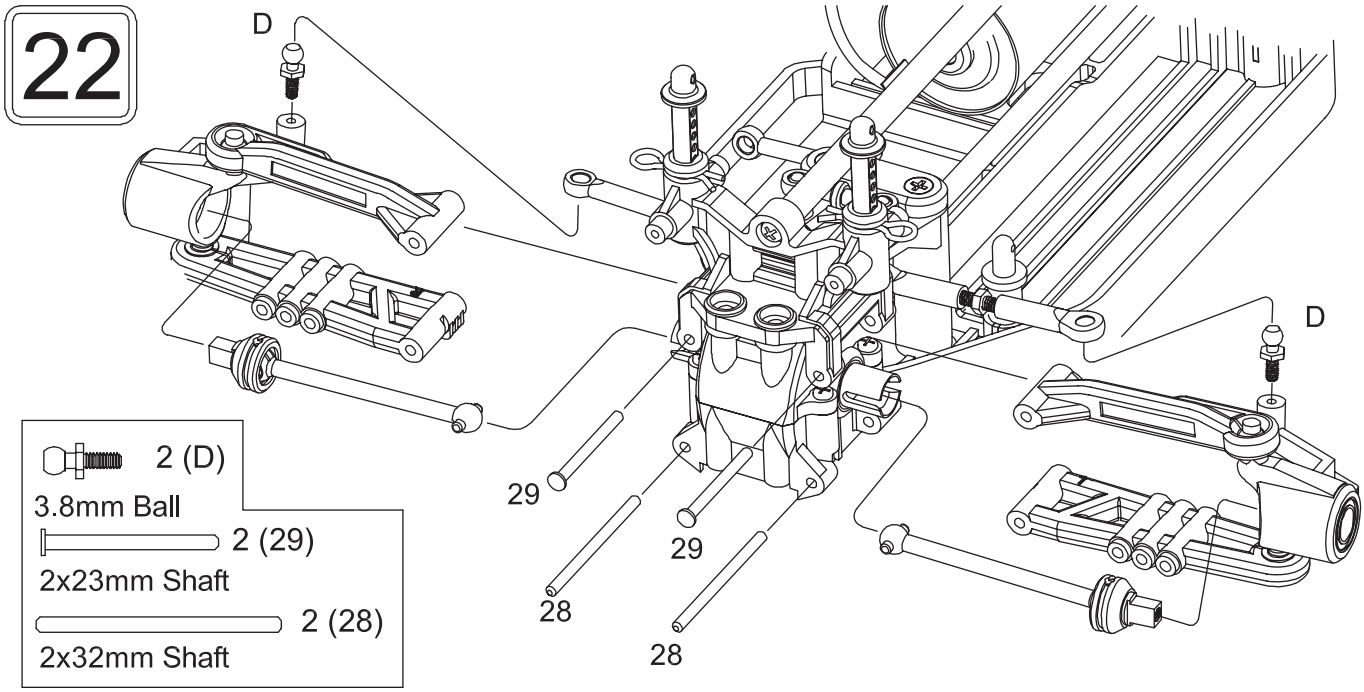
D
D
29
29
28
28
2 (D)
3.8mm Ball
2 (29)
2x23mm Shaft
2 (28)
2x32mm Shaft

23

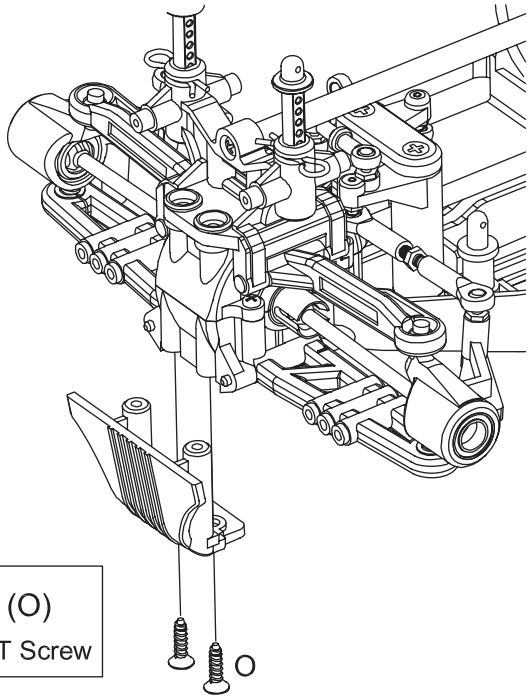

2 (O)
2.6x10mm ST Screw

24

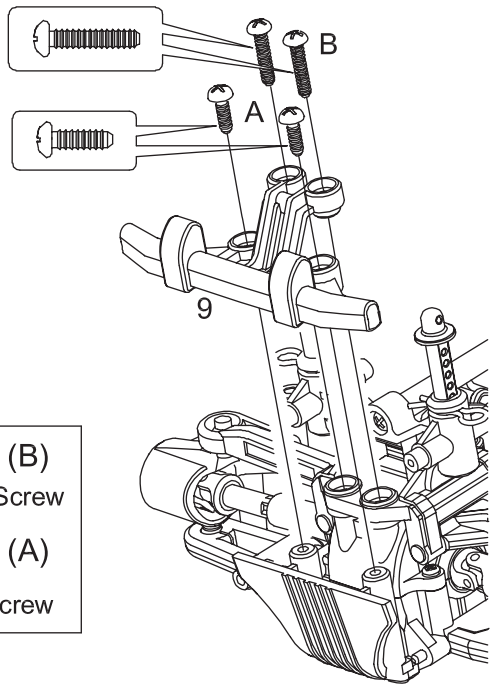

4 (B)
2.6x12mm ST Screw

4 (A)
2.6x8mm ST Screw

25

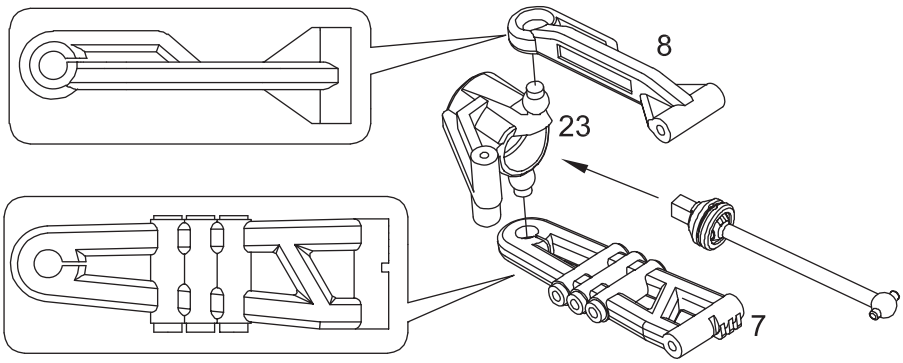

26

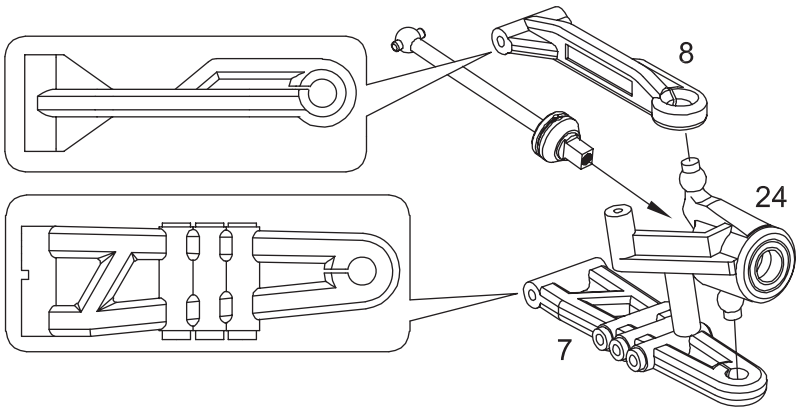

27

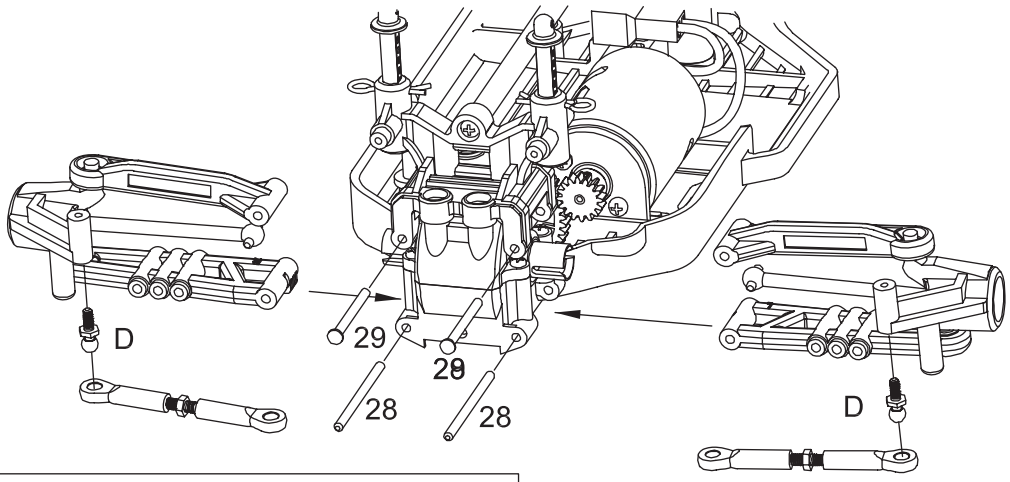

2 (29)	2 (28)	2 (D)
2x23mm Shaft	2x32mm Shaft	3.8mm Ball

28

2 (D)
3.8mm Ball

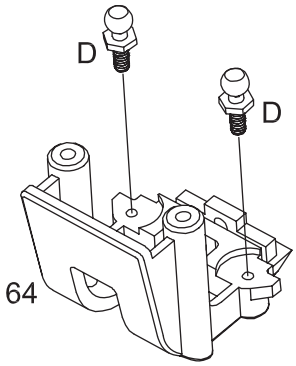

29

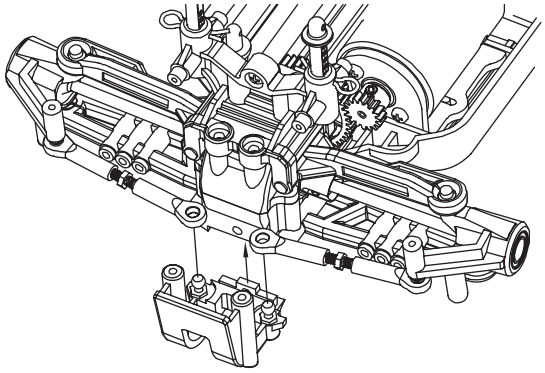

30

3 (B)
2.6x12mm ST Screw
2 (A)
2.6x8mm ST Screw

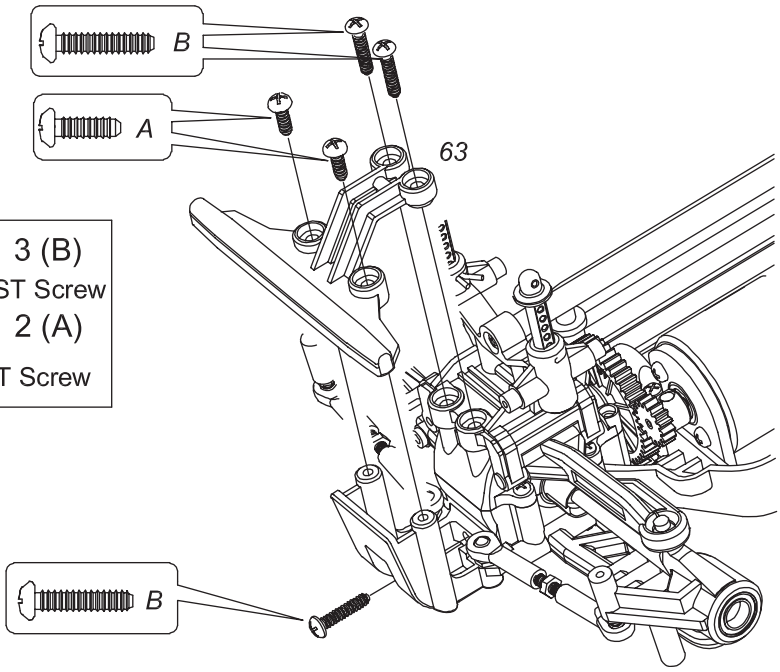

31

16 (R)
O-ring

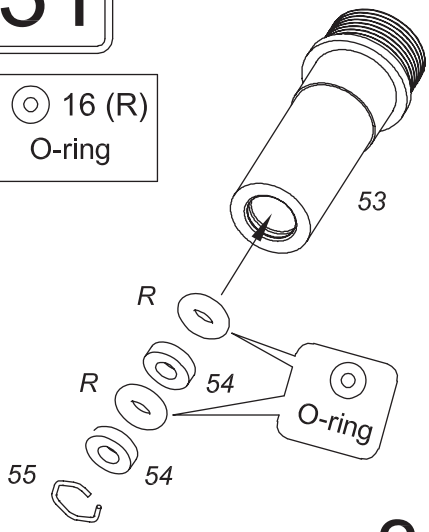

x8

32

16 (E)
1.5mm E-CLIP

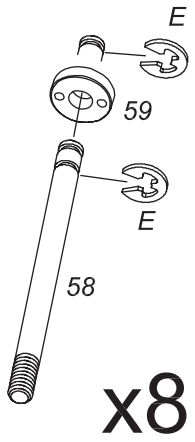

33

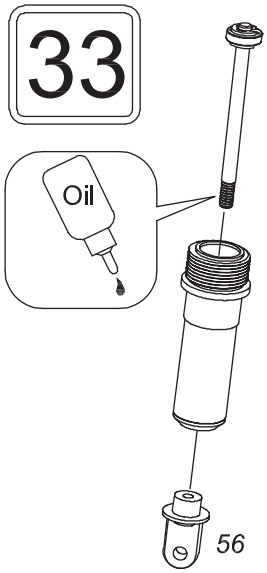

34

Slowly move the shaft up and down several times to remove bubbles.

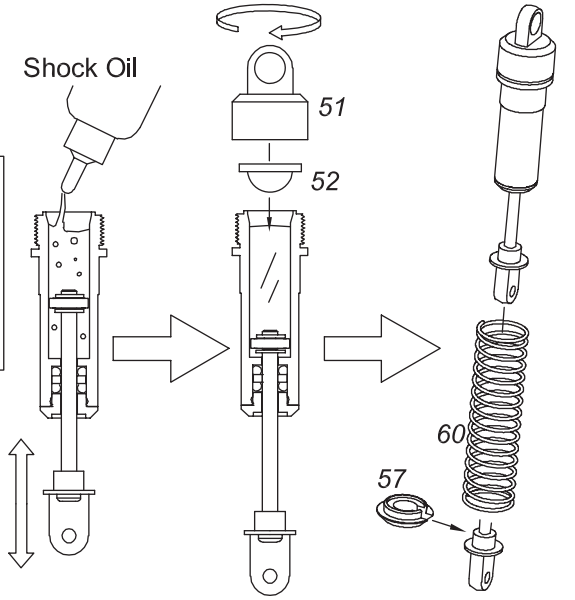

35

4 (27) Shock lower pin
8 (E) 1.5mm E-CLIP
8 (N) 2x6mm Screw

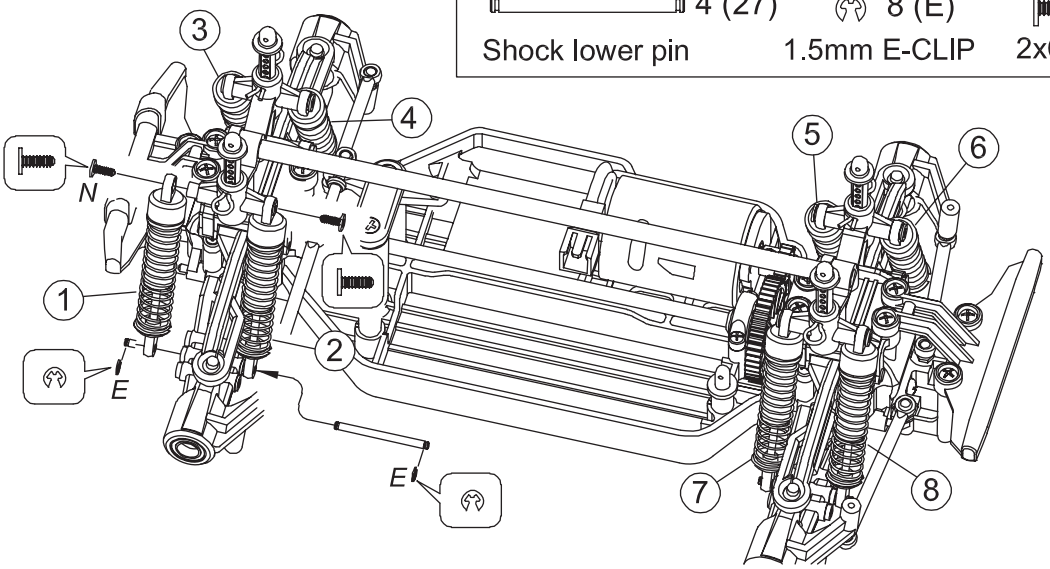

36

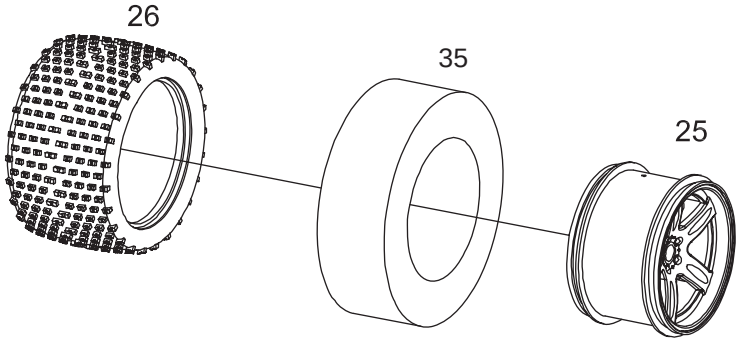

x4

37

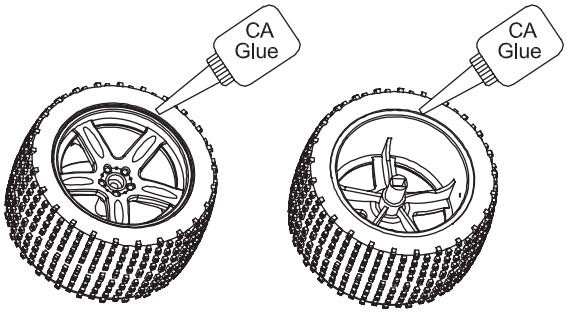

Apply CA glue to the inside of both the rim and the tire.

38

4 (F)
2.6x16mm Screw

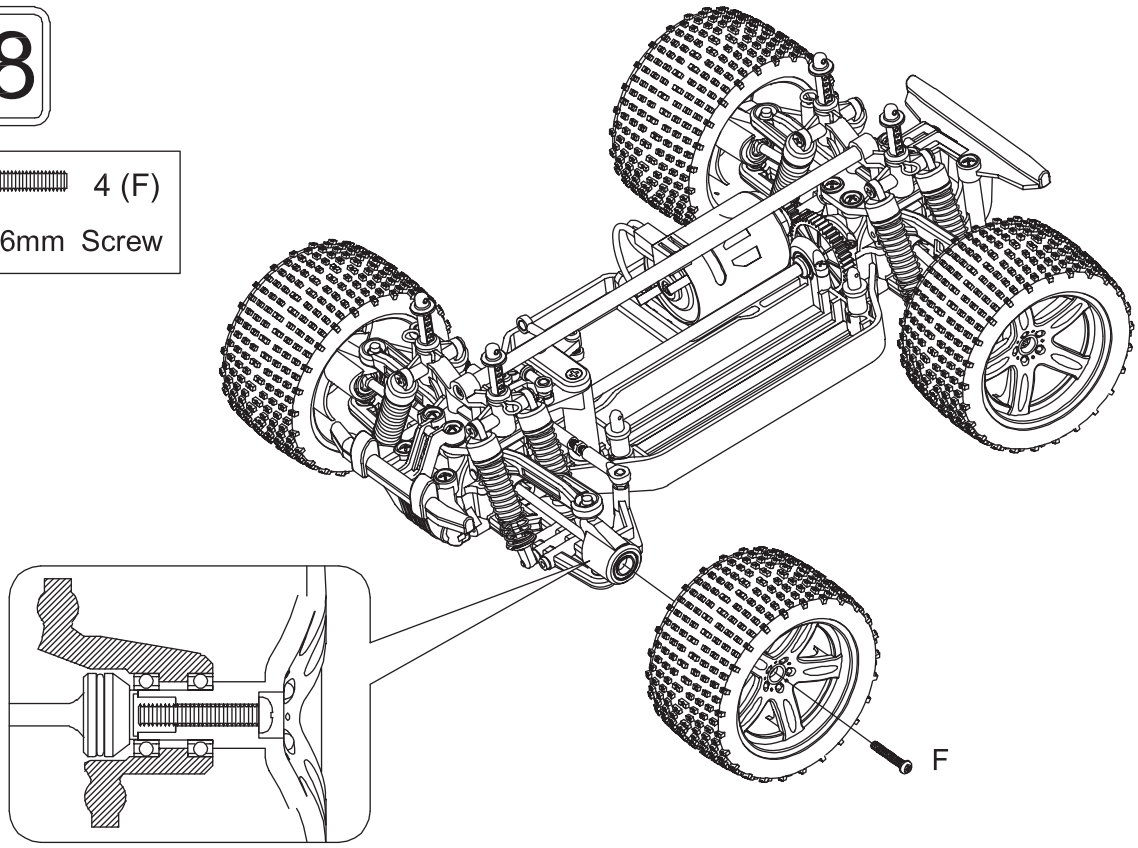

39 *ESC WIRING DIAGRAM*

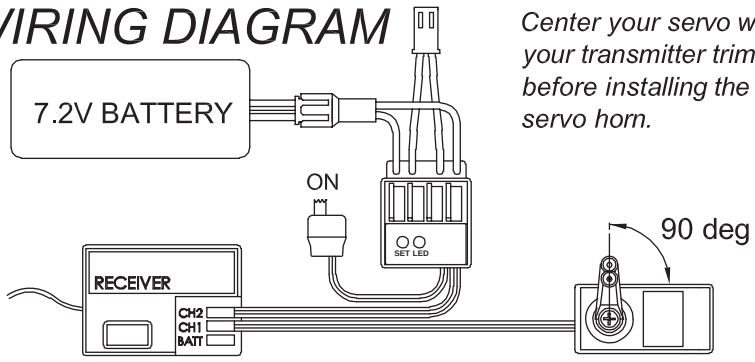

Center your servo with your transmitter trims before installing the servo horn.

.....2
3.8mm Ball

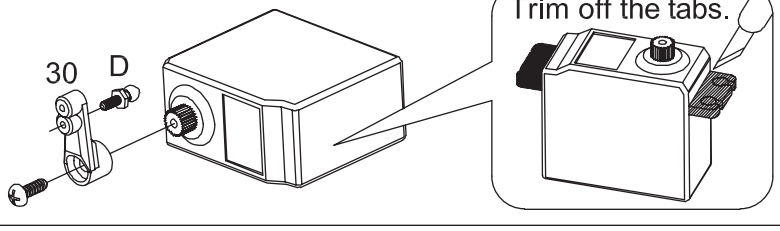

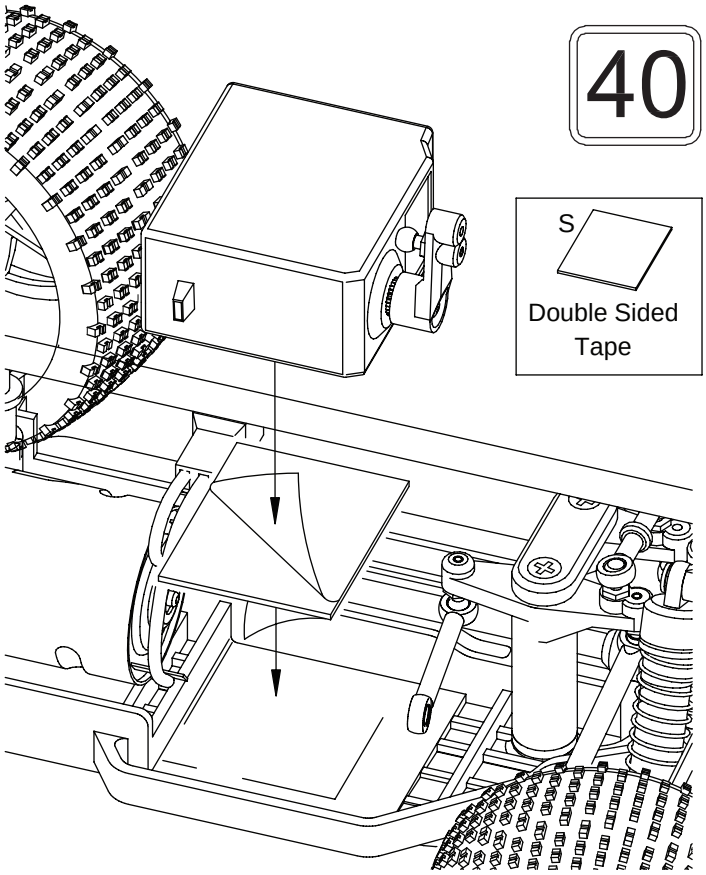

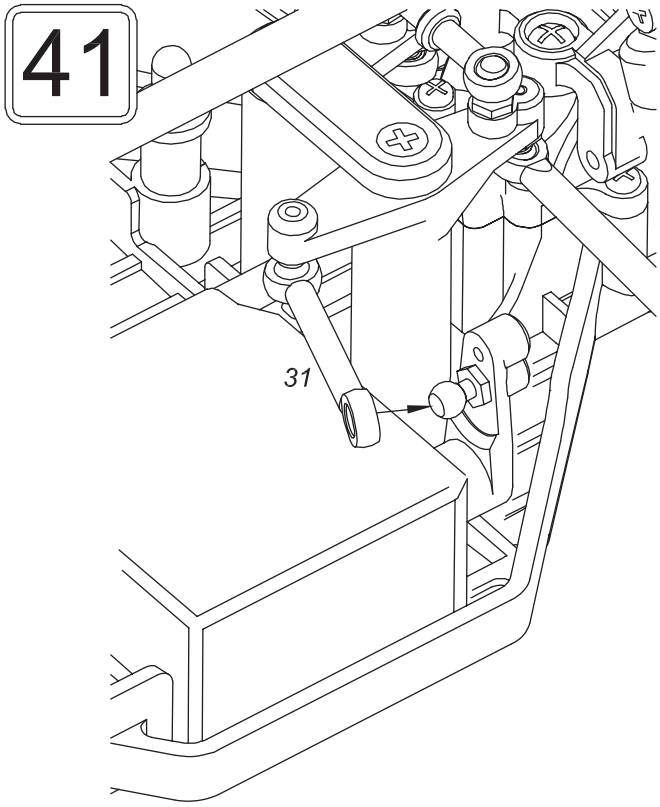

Typical steering servo installation.

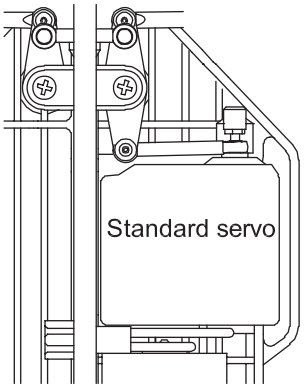

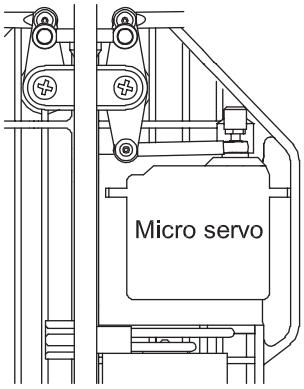

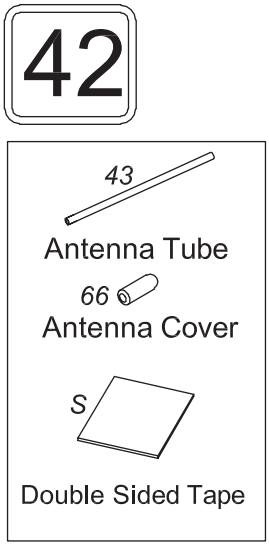

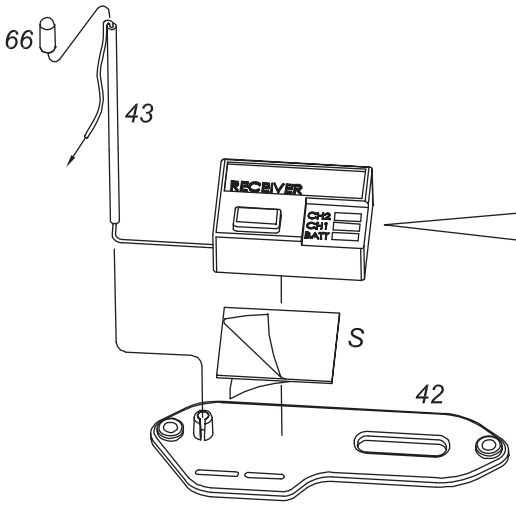

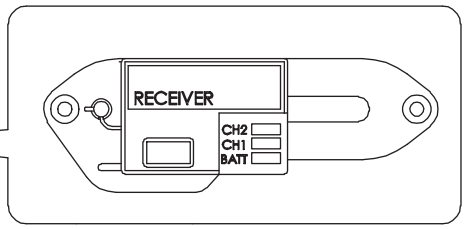

IMPORTANT: Never cut the receiver antenna! Doing so will severely reduce your range.

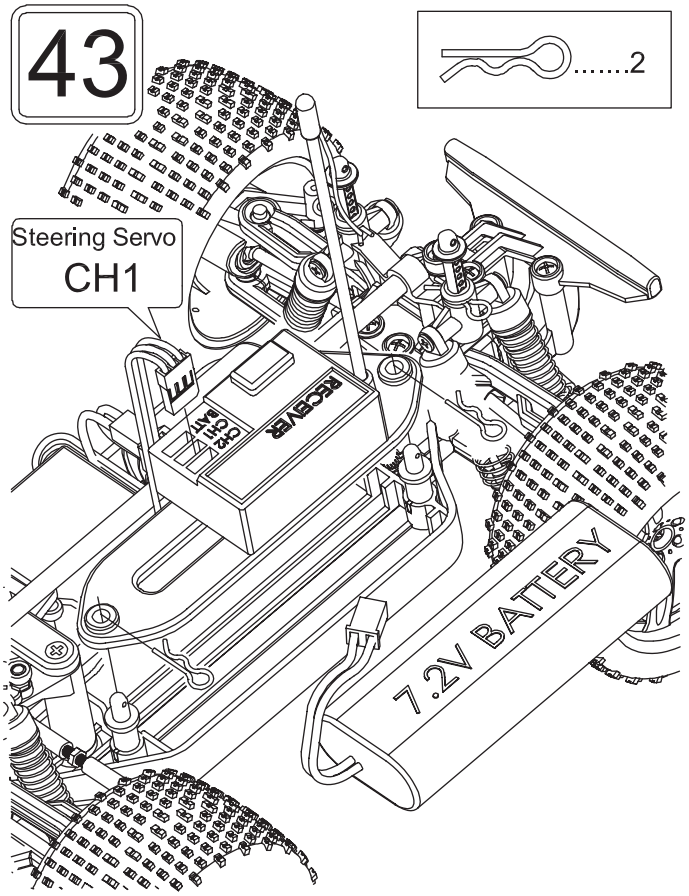
43
.....2
Steering Servo
CH1
RECEIVER
CH2
CH1
BATT
7.2V BATTERY

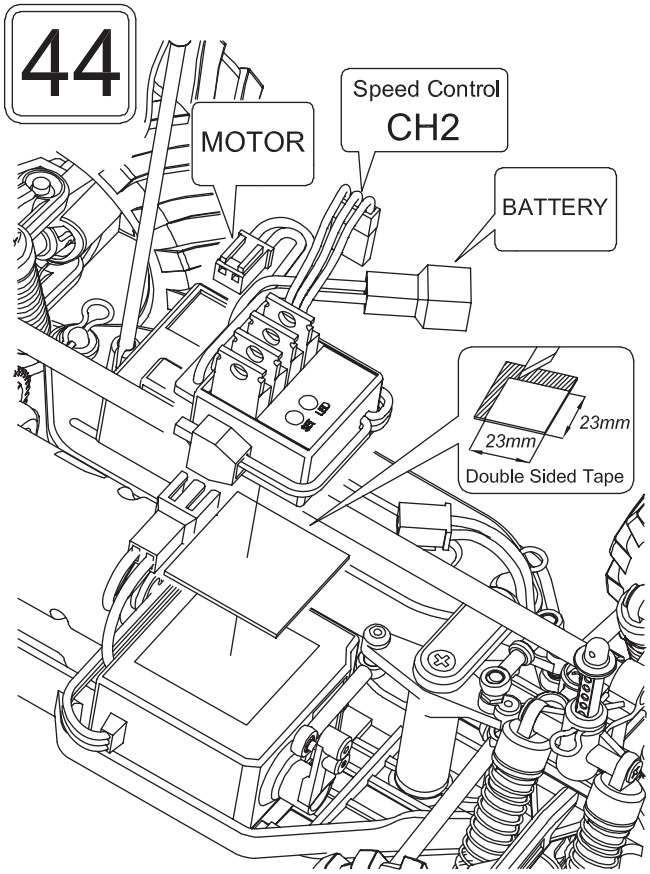
44
MOTOR
Speed Control
CH2
BATTERY
23mm
23mm
Double Sided Tape

FINISHED

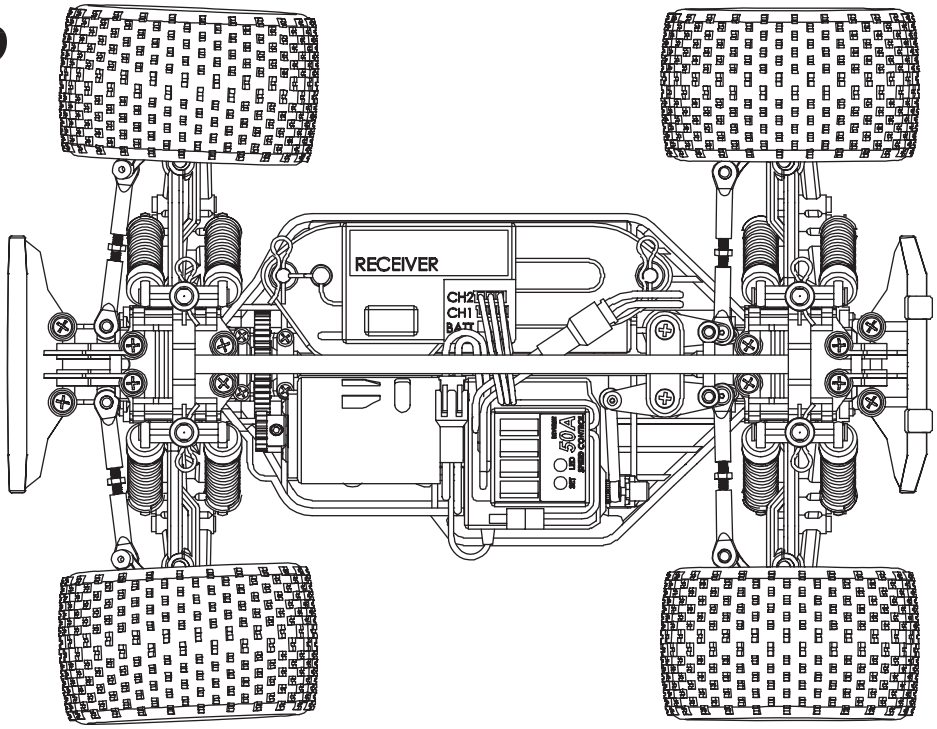
RECEIVER
CH2
CH1
BATT
50A

OTHER ITEMS AVAILABLE FROM DURATRAX

DTXR0140 Screwdriver Set

DTXQ0100
Metric Phillips Head Screw Set

DTXR0292 Ultimate Drivers
Metric Hex Drivers

DTXC2377
Kwik Trak Racing Cones

DTXR0183 Ultimate Drivers
Phillips Screwdriver

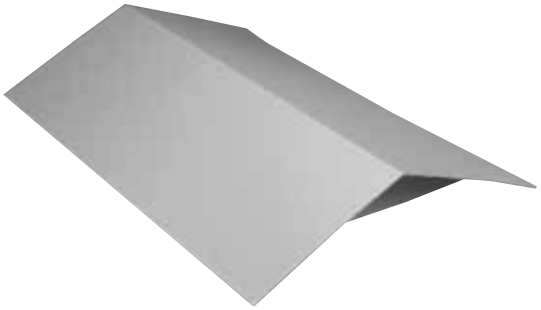

DTXC2375
Kwik Ramp Portable Jump

DTXC2459
Power Shot Motor Cleaner

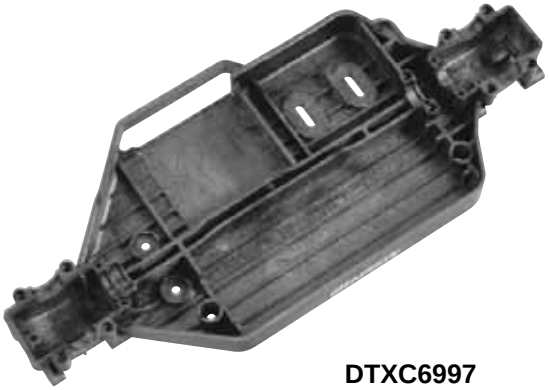

DTXC6997
Graphite Chassis

DTXP2040 Vinyl Work Mat

DTXP2015
Transmitter Bag

DTXC2361 Blue **DTXC2363 Purple**
DTXC2362 Orange **DTXC2364 Green**
Pit Tech Mini Car Stand

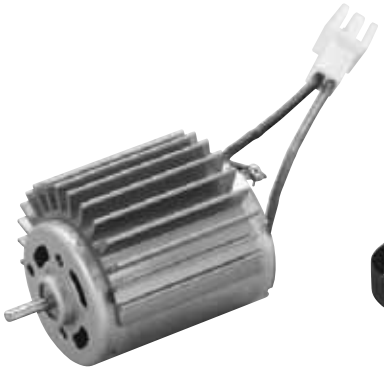

DTXC8279
Motor Heatsink Blue