CAT '98 SPARES DIAGRAM
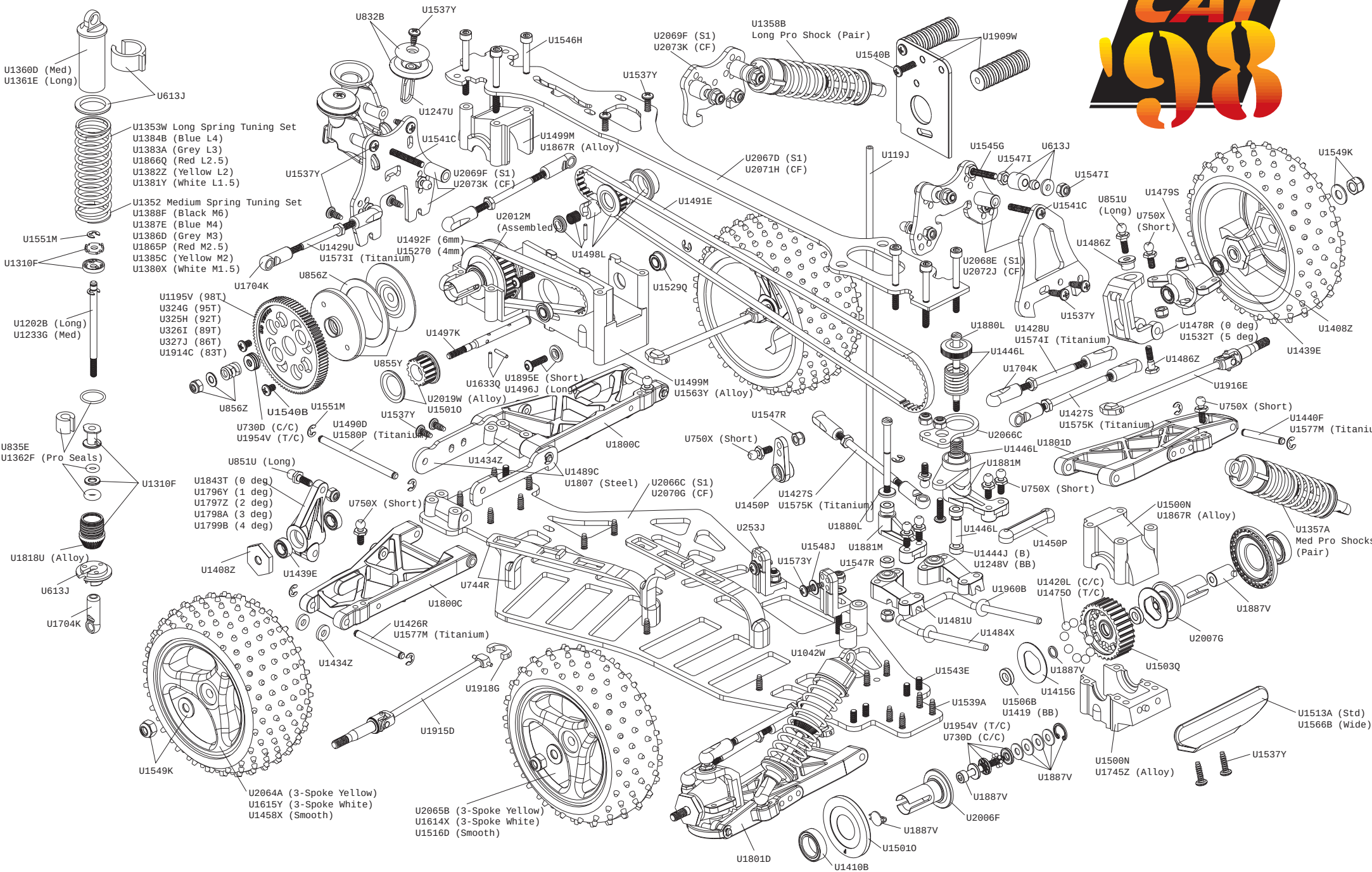
Schumacher