JRS

1/10th Scale Expert Racing Sedan

Owner's Manual

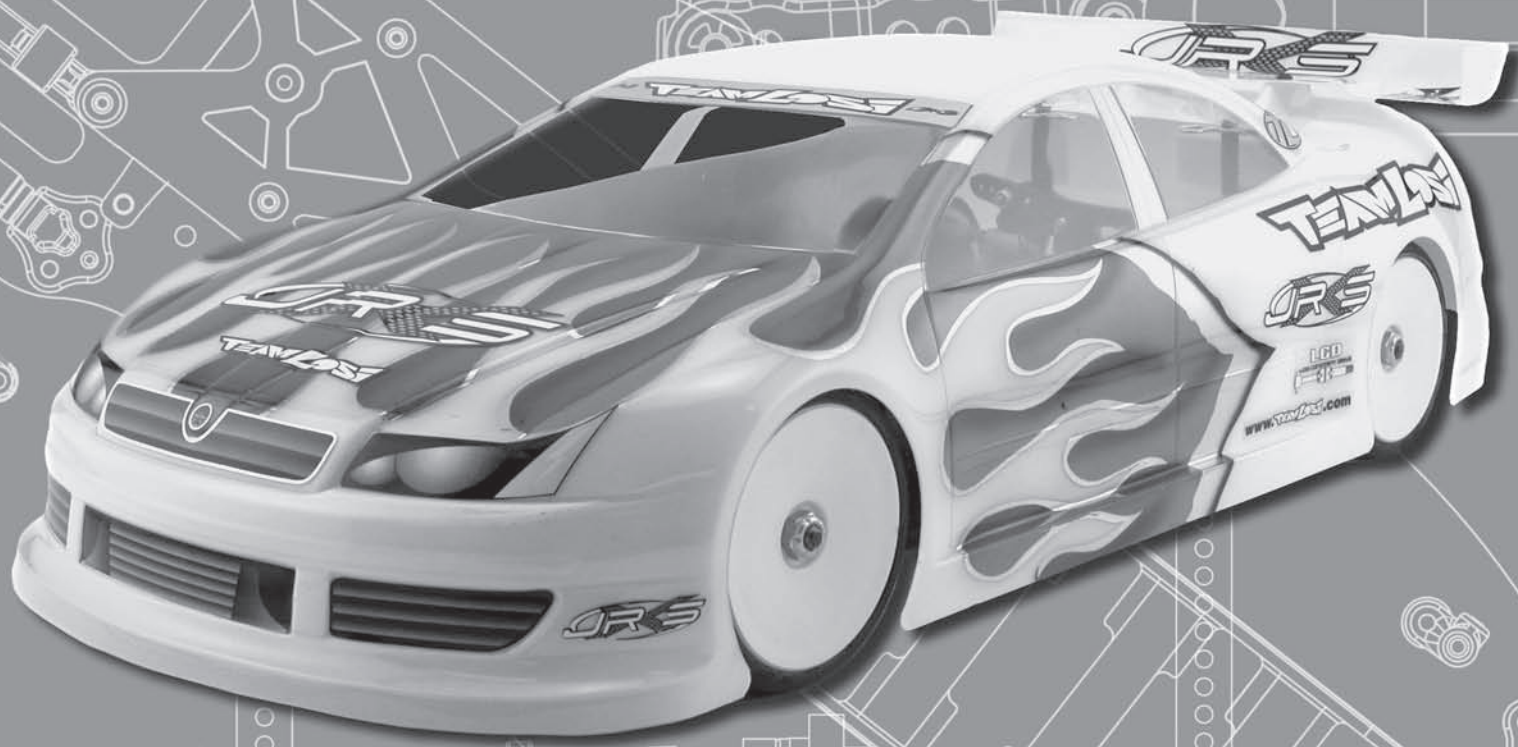

TEAM LOSI

ALWAYS RACING TOWARDS THE FUTURE.

Team Losi, A Division of Horizon Hobby Inc.
4710 E. Guasti Road, Ontario, CA 91761
Phone:(909) 390-9595 / Fax:(909) 390-5356
www.TeamLosi.com / email: feedback@TeamLosi.com

❑ STEP I-01 *Introduction to the JRX-S Manual*

Welcome Team Losi *JRX-S* Owner!

Thank you for selecting the *JRX-S* as your new racing sedan. The *JRX-S* has already distinguished itself as a top caliber racing chassis and as you will see, we have made every effort to produce a kit that is not only the most competitive but also easy to build and maintain. The simple bag-by-bag assembly sequence and easily followed instructions and drawings combined with Team Losi's world famous quality fitting parts will make building the *JRX-S* a most enjoyable project.

Before you open the first bag, or start assembly, please take a moment to read through the following instructions. This will familiarize you with the various parts, assembly tips, and descriptions as well as the tools needed. Taking an extra moment before starting can save a good deal of time and assure proper assembly.

Good luck and good racing,

Team Losi

JRX-S COMPLETED KIT SPECIFICATIONS

Overall Length w/o Body: 14-7/8" (378mm)	Wheelbase: 10-3/16" (259mm)	*Front Track Width: 7-5/16" (186mm)
Overall Length w/Body: 16-7/8" (429mm)	*Height: 4-1/2" (114mm)	*Rear Track Width: 7-3/8" (188mm)

Note: Final kit weight will vary depending on accessories used.

**All measurements taken at ride height (5mm).*

Table 1: JRX-S Completed Kit Specifications.

Kit/Manual Organization:

The kit is composed of different bags marked A through F. Each bag contains all of the parts necessary to complete a particular section of the kit. Some of these bags have subassembly bags within them. It is essential that you open only one bag at a time and follow the correct assembly sequence, otherwise you may face difficulties in finding the correct part. It is helpful to read through the instructions for an entire bag prior to beginning assembly. Next to each of the step numbers is a check box. At the completion of each step, place a check in this box so that if you must stop and come back to the assembly, you will be able to pick up where you left off.

For your convenience, an actual-size Hardware Identification Guide is included as a fold-out page at the back of this manual. The hardware in each step is called out with an icon which contains a small picture of the part genre (referenced on the Hardware Identification Guide), the quantity of that part required for what is shown in the step, and the size or name of that part. To check a part, hold it against the silhouette until the correct part is identified. Associated with each of these parts, in the Hardware Identification Guide, is a LOSA-Number which is used when ordering replacement parts for your *JRX-S*. In some cases, extra hardware has been supplied for parts that may be easy to lose.

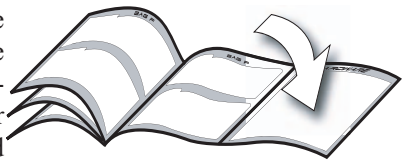

Components used in each step are identified by their relative LOSA-Number and the component's name. With the exception of a few parts, these are not referenced in the Hardware Identification-Guide.

The molded parts in Team Losi kits are manufactured to demanding tolerances. When screws are tightened to the point of being snug, the parts are held firmly in place. For this reason, it is very important that screws not be overtightened in any of the plastic parts.

In some steps there will be a filled black circle with a white number. These indicate the specific order by which assembly must occur. In cases where steps are repeated (front/rear or left/right) these numbers may be omitted. Please note that these numbers will not call out every sub-step required for the step's assembly procedures, they will only highlight the critical order required for assembly.

In each step, there are specific "Detail Icons" (shaped like a stop sign) that call out critical precautions or assembly tips for the process. There is a reference key that describes the meaning of each of the icons located on the fold-out Hardware Identification Guide at the back of this manual.

To ensure that parts are not lost during construction, it is recommended that you work over a towel or mat to prevent parts from rolling away.

IMPORTANT SAFETY NOTES:

1. Select an area for assembly that is away from the reach of small children. *Some parts in this kit are small and can be swallowed by children, causing choking and possible internal injury; PLEASE USE CAUTION!*
2. The shock fluid and greases supplied should be kept out of children's reach. *They are not intended for human consumption!*
3. Exercise care when using any hand tools, sharp instruments, or power tools during construction.
4. Carefully read all manufacturer's warnings and cautions *for any chemicals, glues, or paints that may be used for assembly and operating purposes.*

TOOLS REQUIRED FOR ASSEMBLY

Team Losi has supplied all necessary Allen wrenches and a special wrench that is needed for assembly and adjustments. The following common tools will also be required: Needle-nose pliers, regular pliers, hobby knife, scissors or other body cutting/trimming tools, and a soldering iron may be necessary for radio installation. 3/16”, 1/4”, 5/16”, and 11/32” nut drivers are optional.

RADIO/ELECTRONICS

A suggested radio layout is provided in this manual. Your high performance R/C center should be consulted regarding specific questions pertaining to radio/electrical equipment.

HARDWARE IDENTIFICATION

When in question, use the Hardware Identification Guide at the back of this manual.

- For screws, the prefix number designates the thread size and number of threads per inch (i.e., 4-40 is a #4 size thread with 40 threads per inch). The second number, or fraction, designates the length of the screw. For cap head and button head screws, this number refers to the length of the threaded portion of the screw. For flat head and set screws, this number refers to the overall length of the screw.
- Bearings and bushings are referenced by the inside diameter (I.D.) x outside diameter (O.D.). Shafts and pins are referred to by diameter x length.
- Washers are described by inside diameter or the screw size that will pass through the inside diameter x the thickness of the washer.
- E/C-clips are sized by the shaft diameter that they attach to. The Hardware Icon associated with E/C-Clips only designates the part genre of clips, not the actual part.
- Nuts come in four types, Non-Flanged, Flanged (F), Plain, and Locking (L) (designated on the Hardware Icons). The prefix number designates the thread size and number of threads per inch. The second number, or fraction, designates the size of the hex. For example, L 4-40 x 1/4” designates a Lock nut that will thread onto a 4-40 screw using a 1/4” nut driver.
- Ball studs are described by the length of the neck between the base and the bottom of the ball (i.e., standard, short) and the length of the threaded portion. A female ball stud is also used, this has internal threads similar to a nut.

TABLE OF CONTENTS

SECTIONS

TABLES

Team Losi is continually changing and improving designs; therefore, the actual part may appear slightly different than the illustrated part. Illustrations of parts and assemblies may be slightly distorted to enhance pertinent details.

❑ STEP A-01 *Bulkhead Installation*

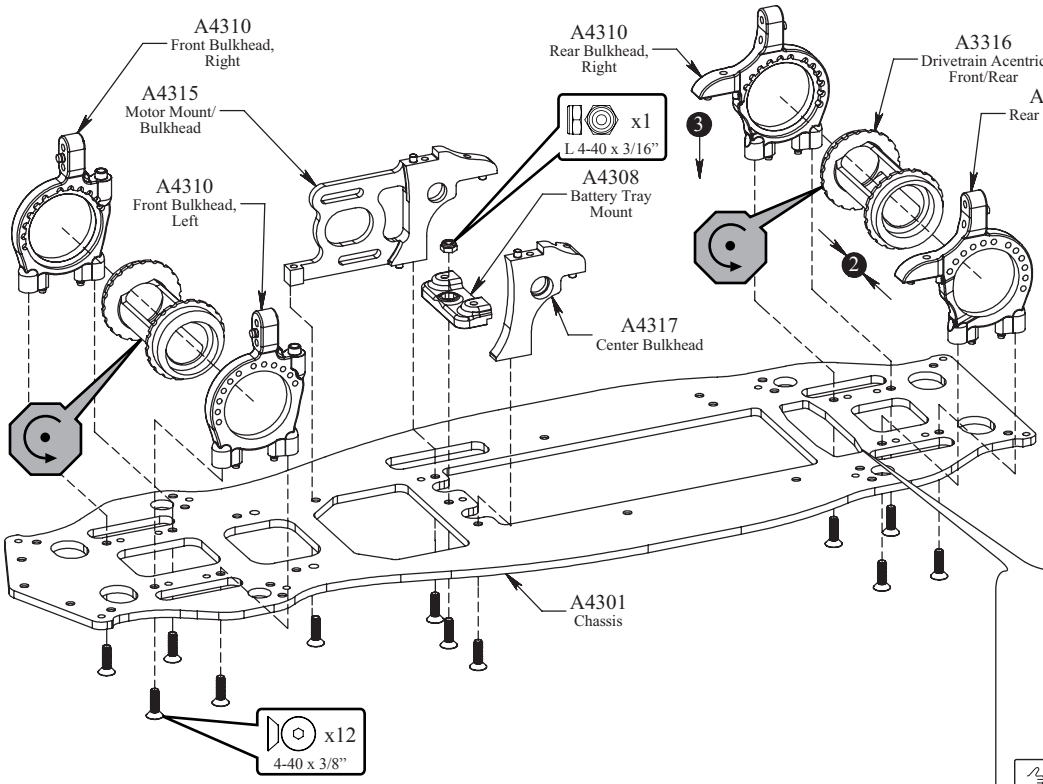

- File down the corners (shown in grey) of the rear battery slot (**on the side of the chassis without countersinks**) to allow the rear most battery cell to sit flush with the bottom of the Chassis. **BE CAREFUL NOT TO ALLOW THE BATTERY TO HANG BELOW THE CHASSIS.**

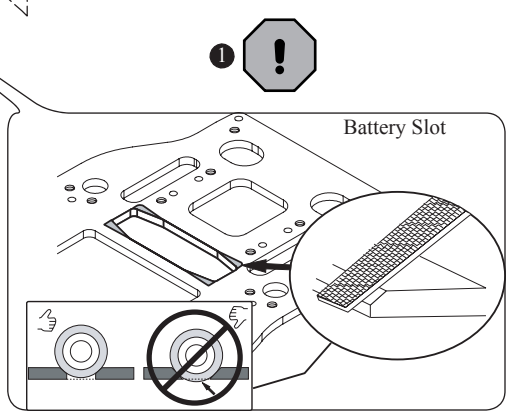

❑ STEP A-02 *Servo Assembly*

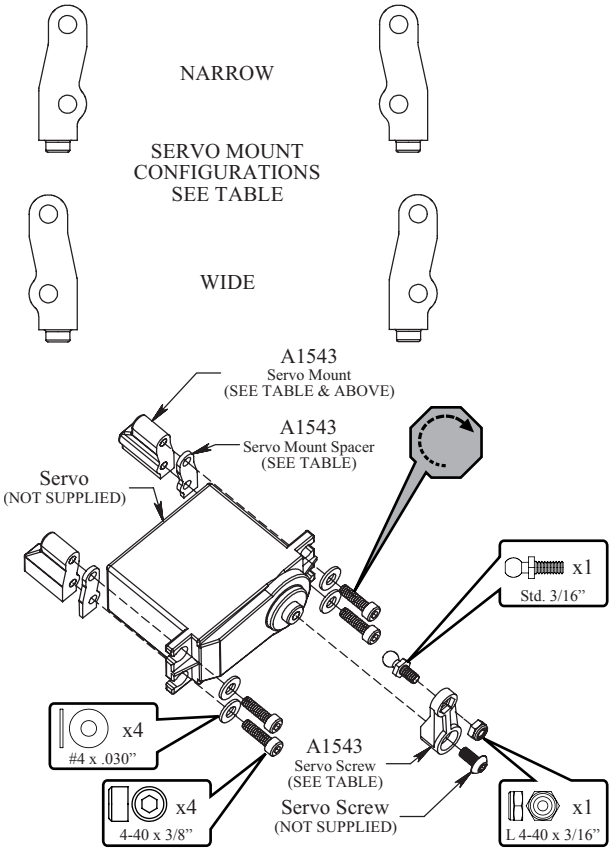

Servo Manufacturer, Make/Model	Servo Horn	Mount Position	Spacer Use
JR ALL	23T	Wide	Optional
KO ALL	25T	Wide	Optional
Hitec ALL	24T	Wide	Optional
Futaba ALL	25T	Wide	Optional
Airtronics ALL	23T	Wide	Optional

Table 2: Servo Installation Table for the JRX-S Expert Racing Sedan.

- Ensure the servo gear is **centered** before attaching the Servo Horn. This is best accomplished by connecting the servo to the radio system and setting the trim to center.
- DO NOT tighten the four 4-40 x 3/8” Cap Head Screws all the way, they must be tightened after assembly to the Chassis is complete to ensure proper alignment.

❑ STEP A-03 *Servo Installation*

- Once the Servo Mounts are secured to the Chassis, ensure the servo is centered in-between the Mounts and tighten the four 4-40 x 3/8” Cap Head Screws.

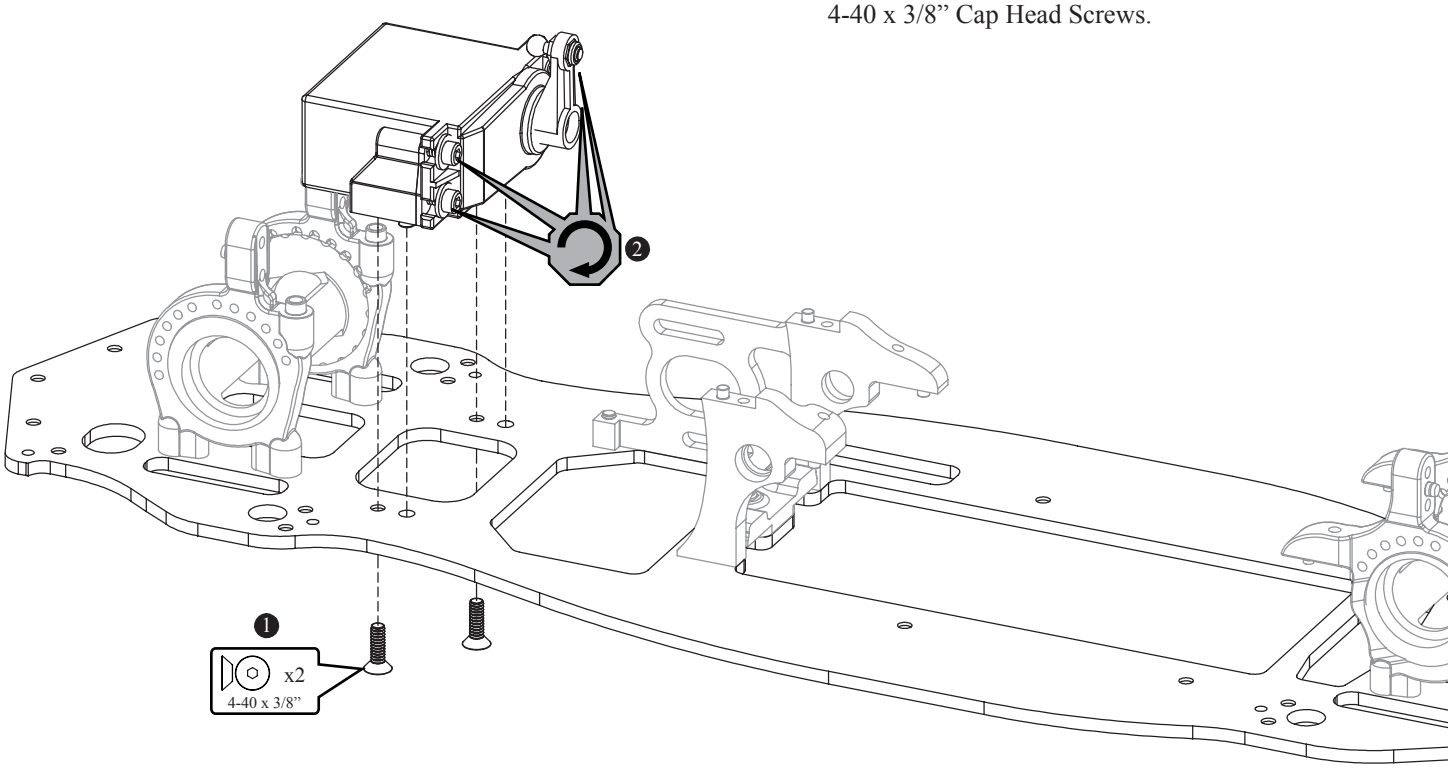

❑ STEP A-04 *Steering Assembly*

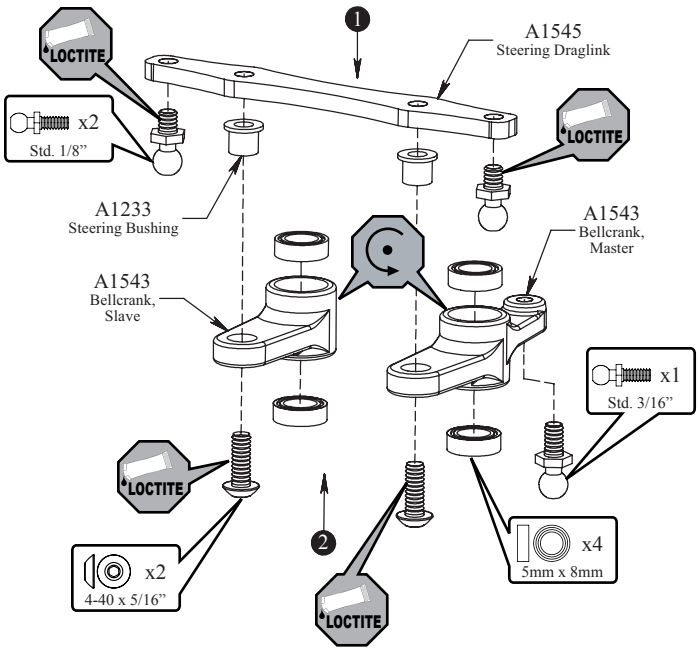

❑ STEP A-05 *Front Top Plate Assembly*

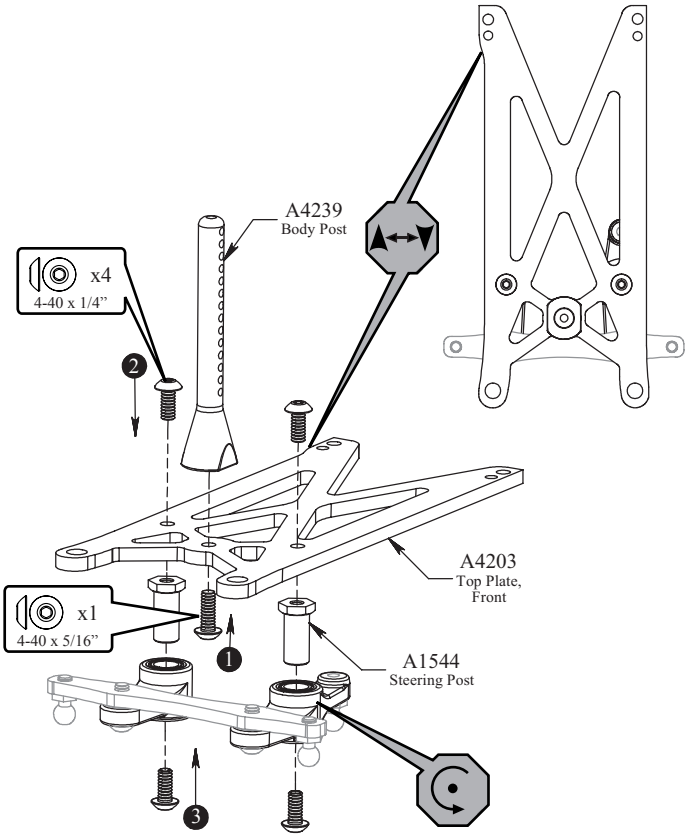

❑ STEP A-06 *Top Plate Installations*

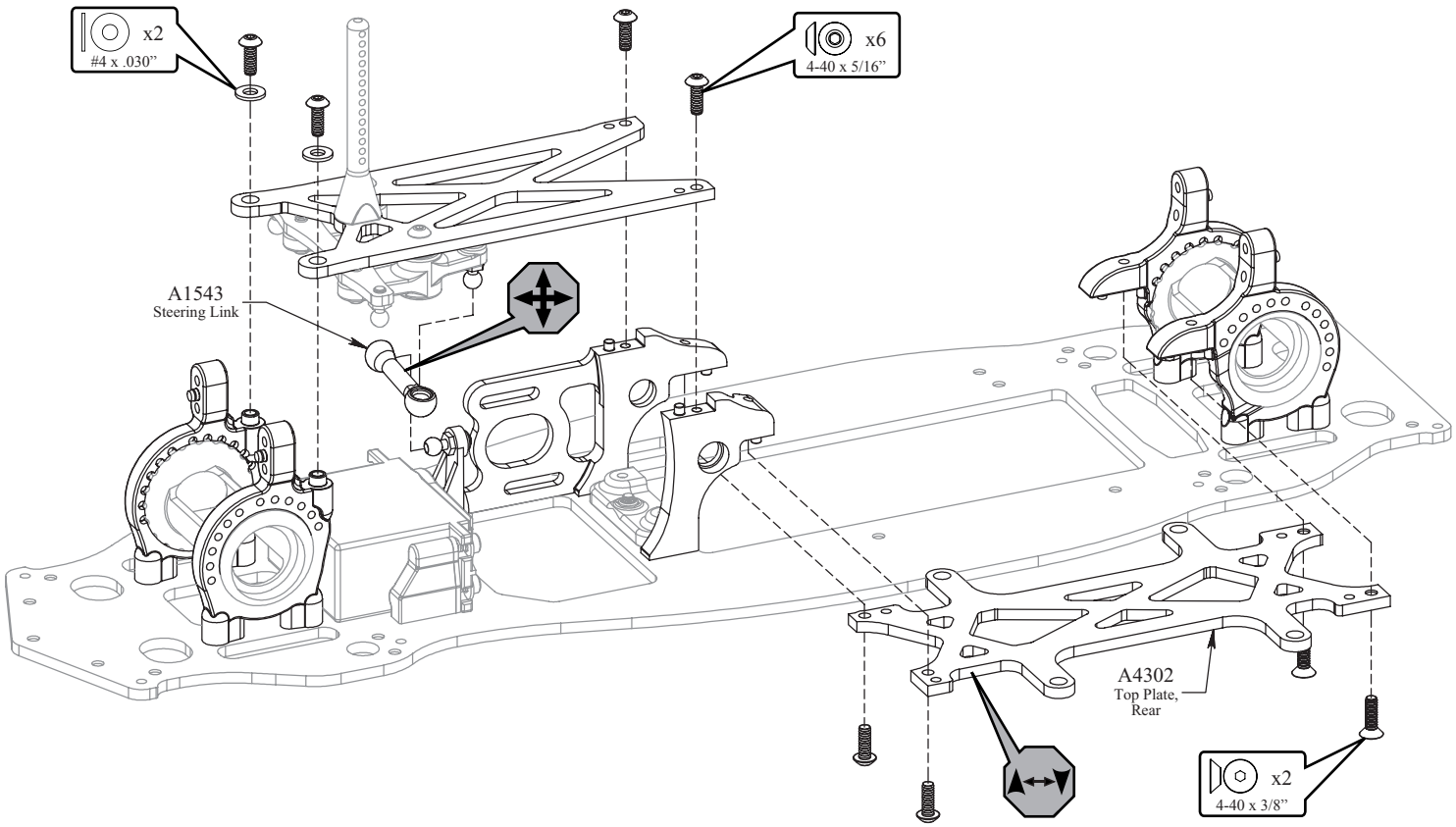

❑ STEP A-07 *Bag A Completed Assembly*

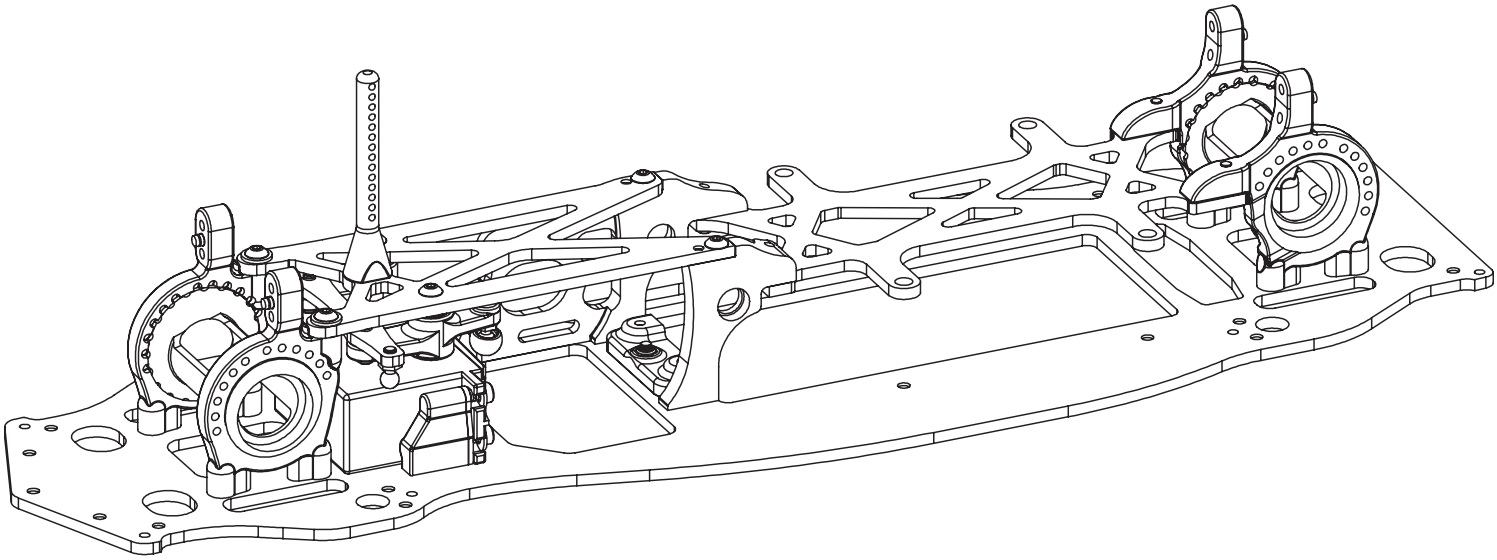

❑ STEP B-01 *Drive Pulley Assemblies*

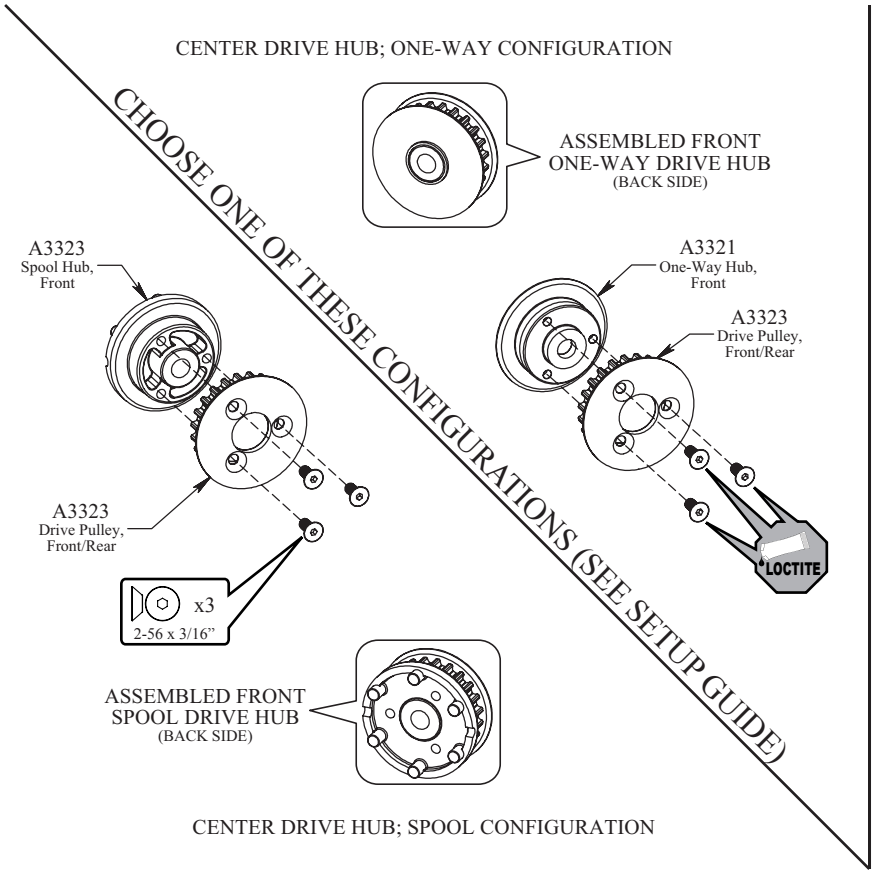

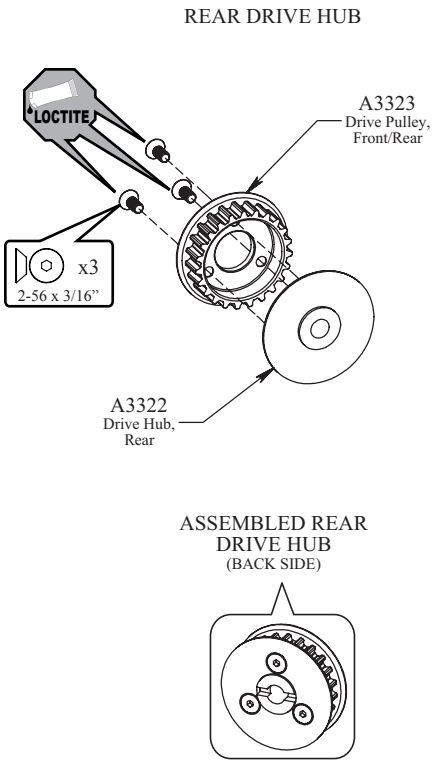

❑ STEP B-02 *Center Shaft Installation*

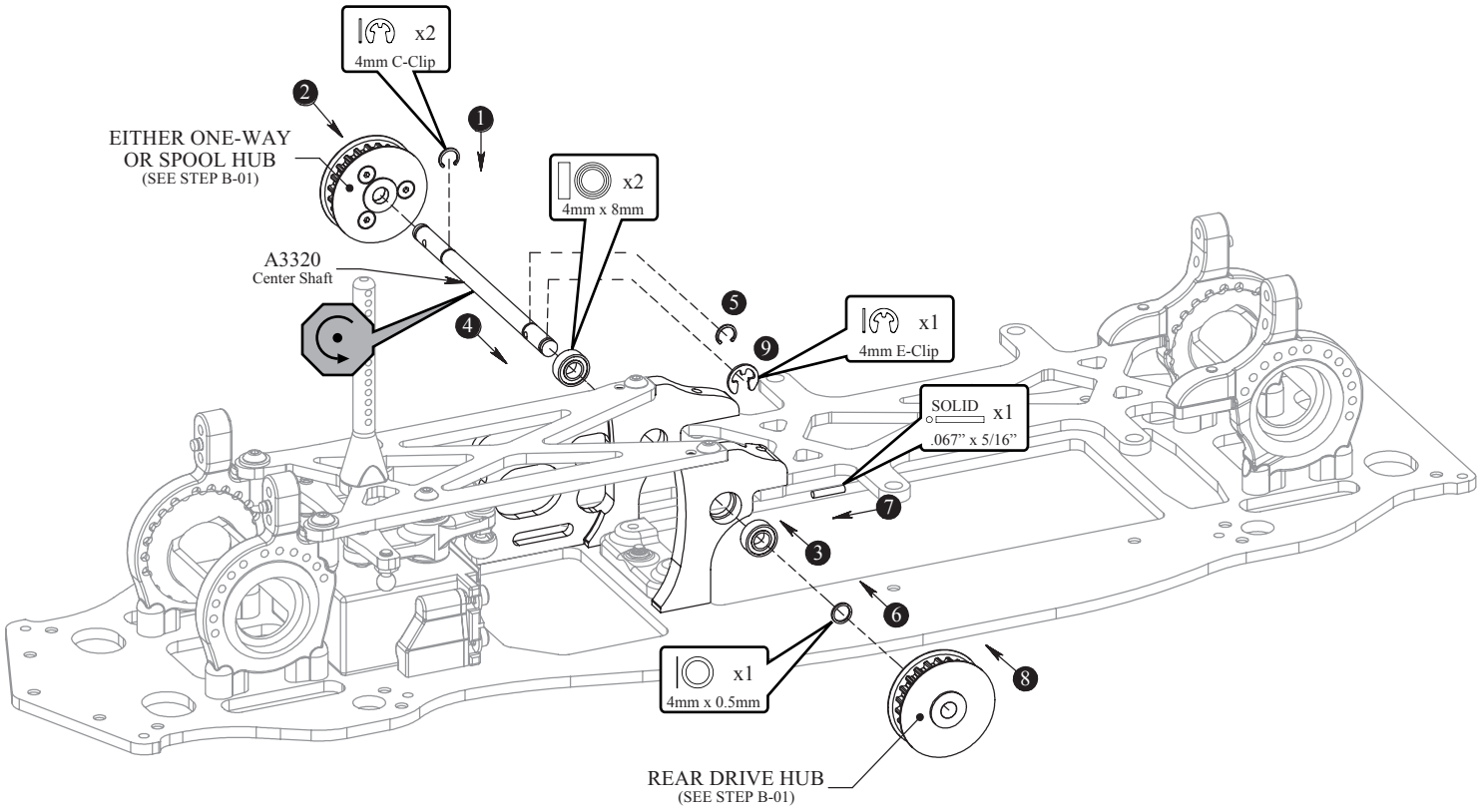

❑ STEP B-03 — Differential Assembly

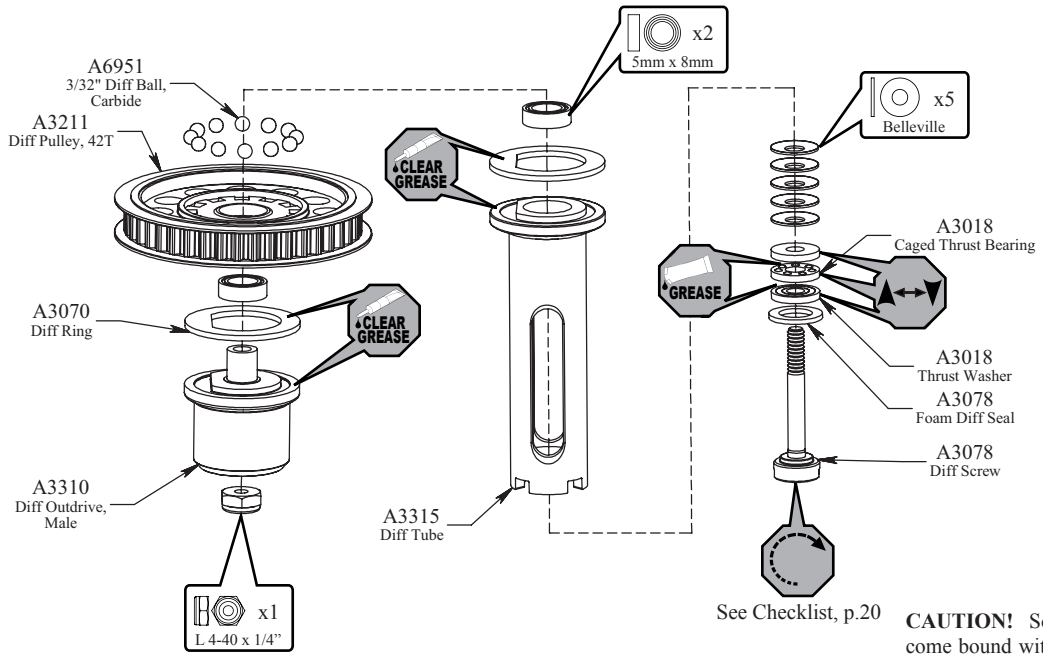

See Checklist, p.20

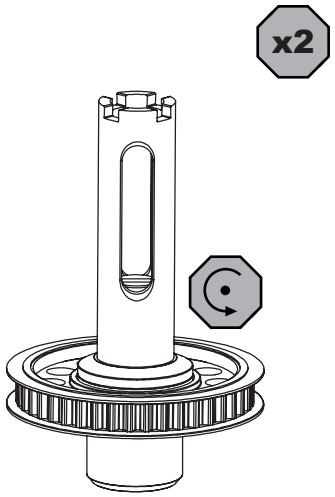

COMPLETED DIFFERENTIAL

- Apply a small amount of Clear Diff Grease to the Diff Outdrive and the Diff Tube before installing the Diff Ring.
- Apply enough Clear Diff Grease to the top side of the Diff Rings, or to both sides of recessed Ball section in the Diff Pulley (after Diff Balls are installed) to cover the Diff Balls when the Diff is assembled.
- Assemble the Diff and tighten until some resistance is felt, see the Final Checklist for final Diff adjustment procedures.

CAUTION! Some Thrust Bearing assemblies come bound with a small wire. This wire must be removed before installing the Thrust Bearing.

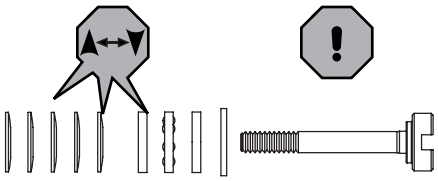

❑ STEP B-04 — Differential Installation

DO NOT PINCH BELTS

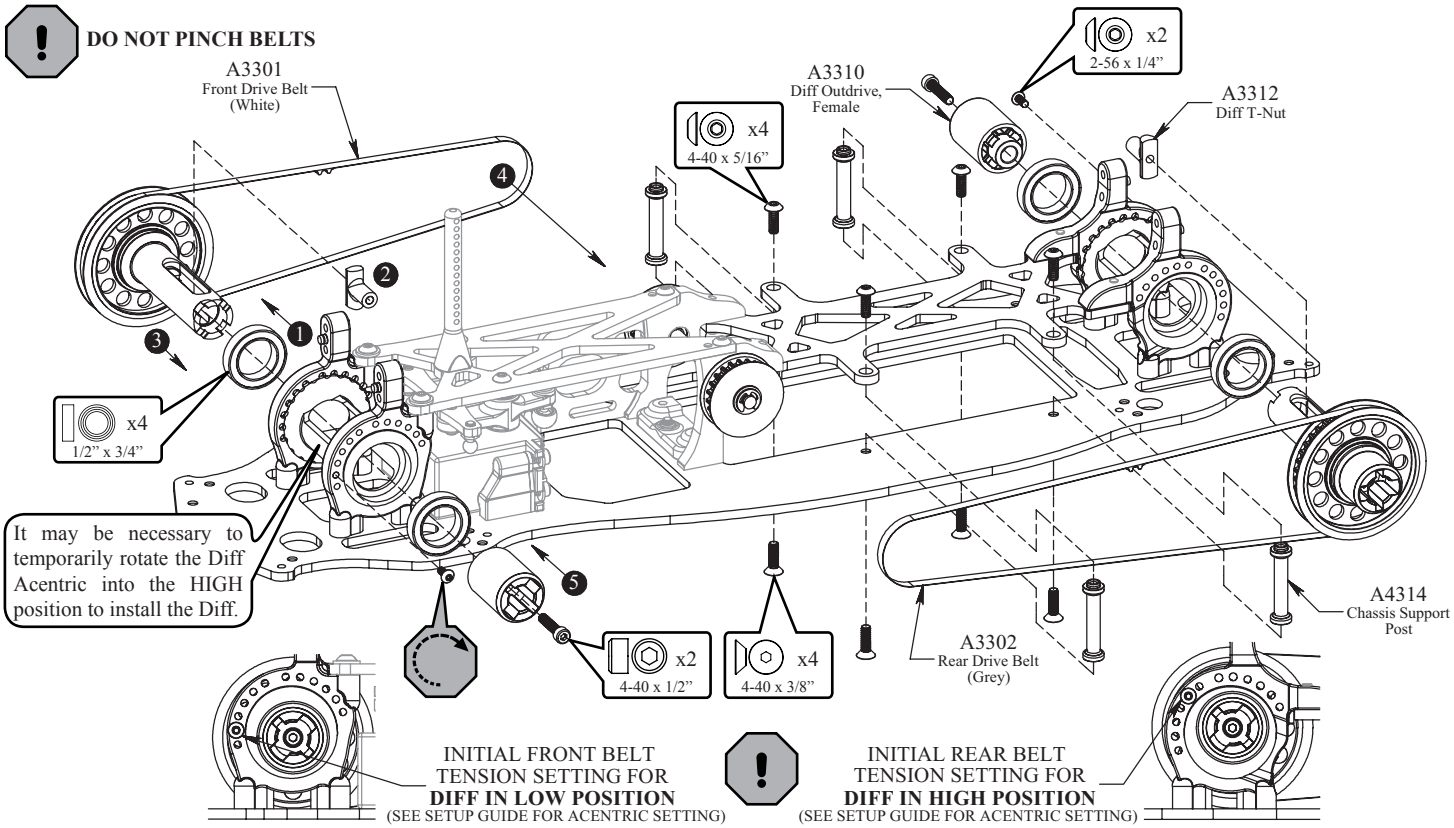

❑ STEP B-05 *Spur Gear Installation*

CENTER ONE-WAY ASSEMBLY

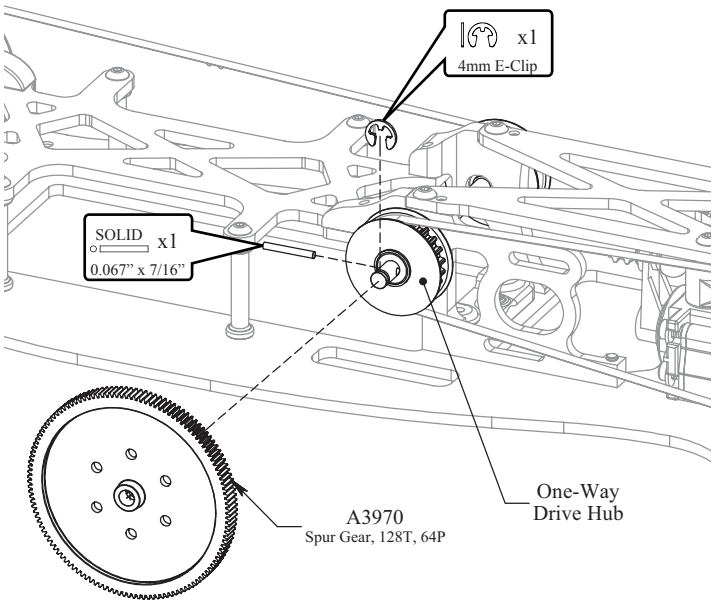

CENTER SPOOL ASSEMBLY

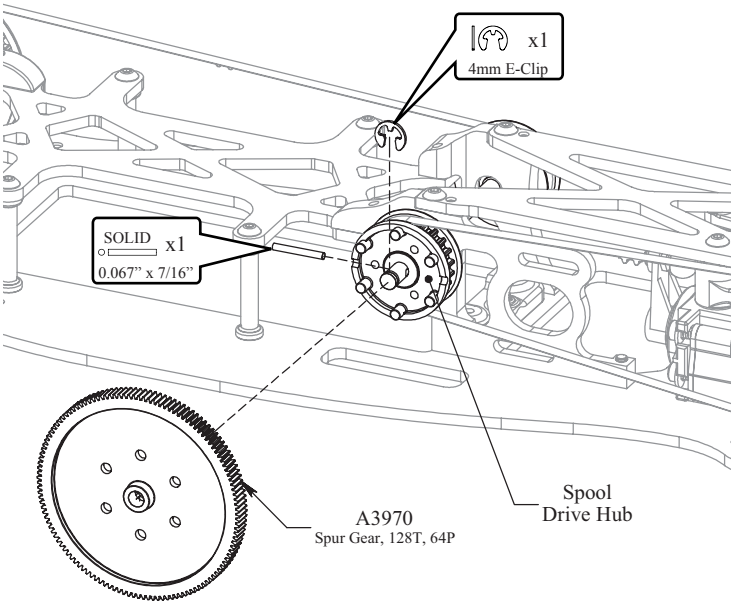

❑ STEP B-06 *Bag B Completed Assembly*

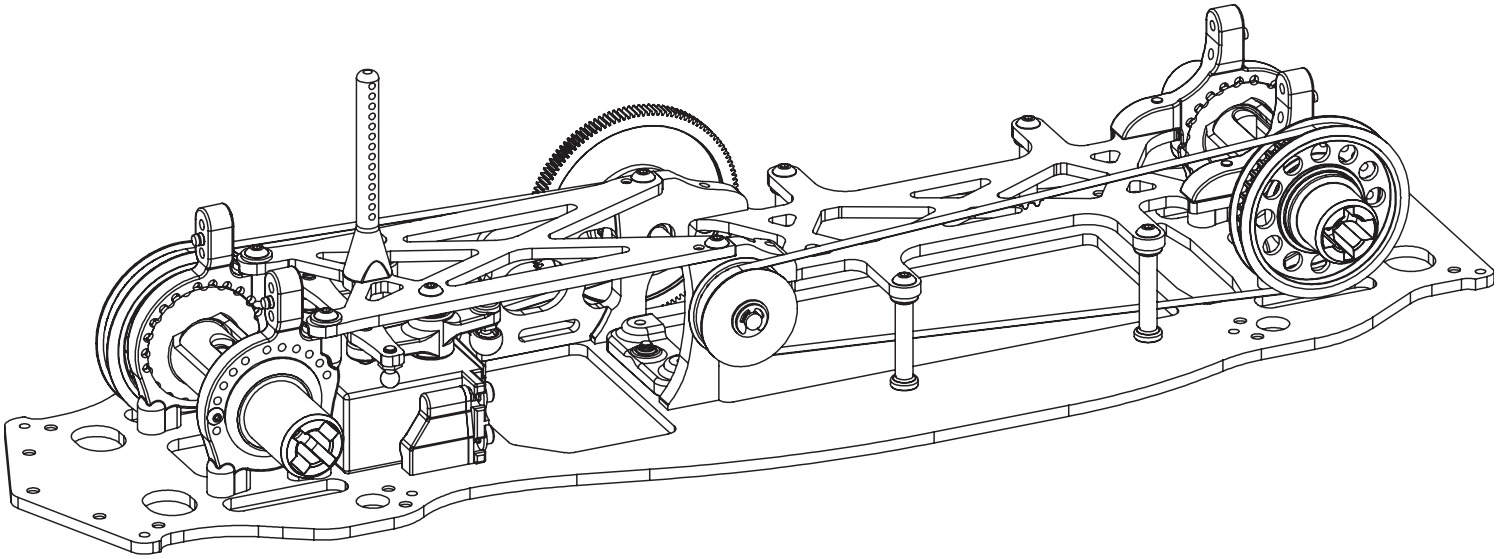

❑ STEP C-01 — *LCD and Spindle Assembly*

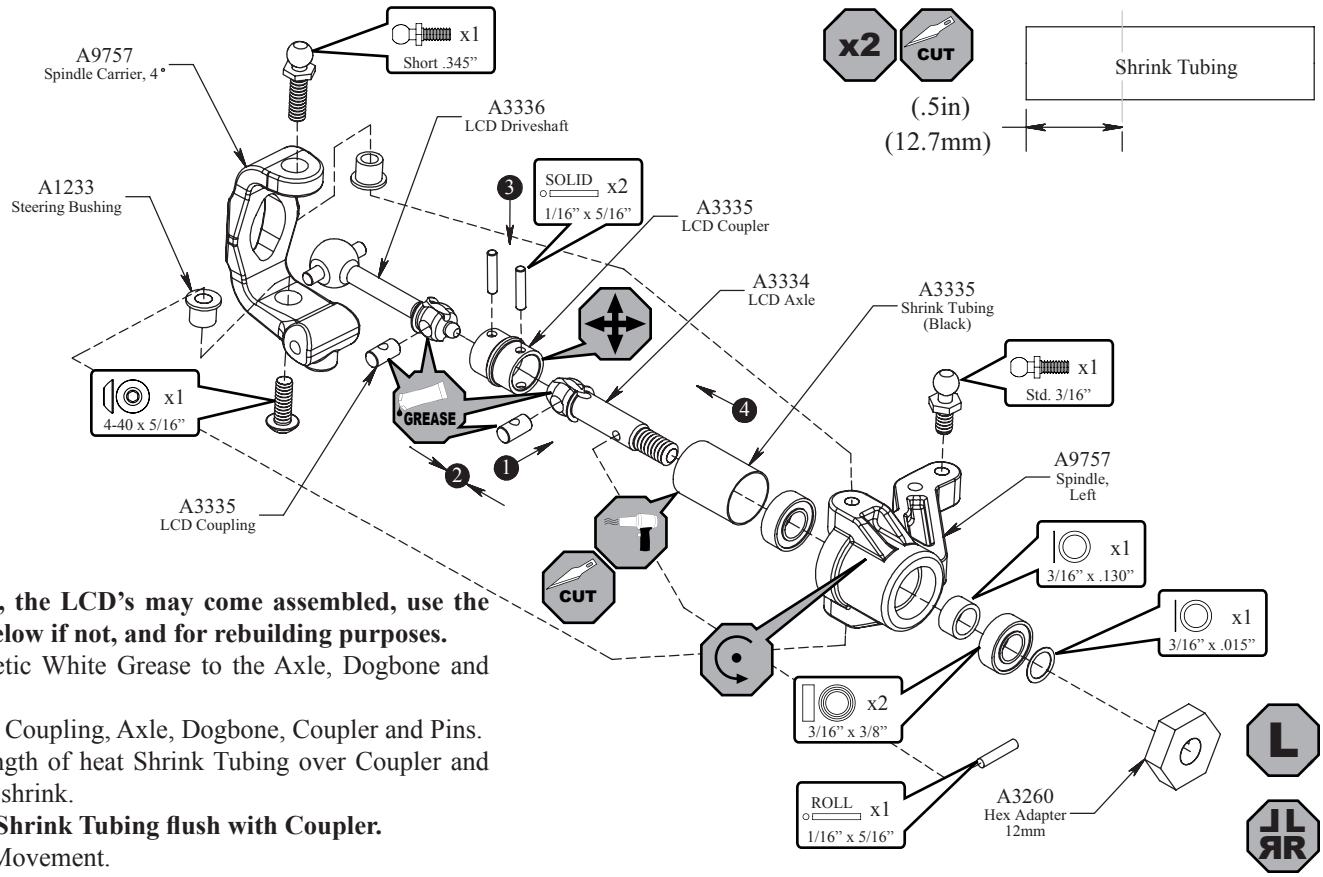

- **In some kits, the LCD's may come assembled, use the guidelines below if not, and for rebuilding purposes.**
- Apply Synthetic White Grease to the Axle, Dogbone and Couplings.
- Assemble the Coupling, Axle, Dogbone, Coupler and Pins.
- Install cut length of heat Shrink Tubing over Coupler and apply heat to shrink.
- **Trim excess Shrink Tubing flush with Coupler.**
- Ensure Free Movement.

❑ STEP C-02 — *Front Arm Assembly*

- See Setup Guide for Droop and Up-Travel adjustments.

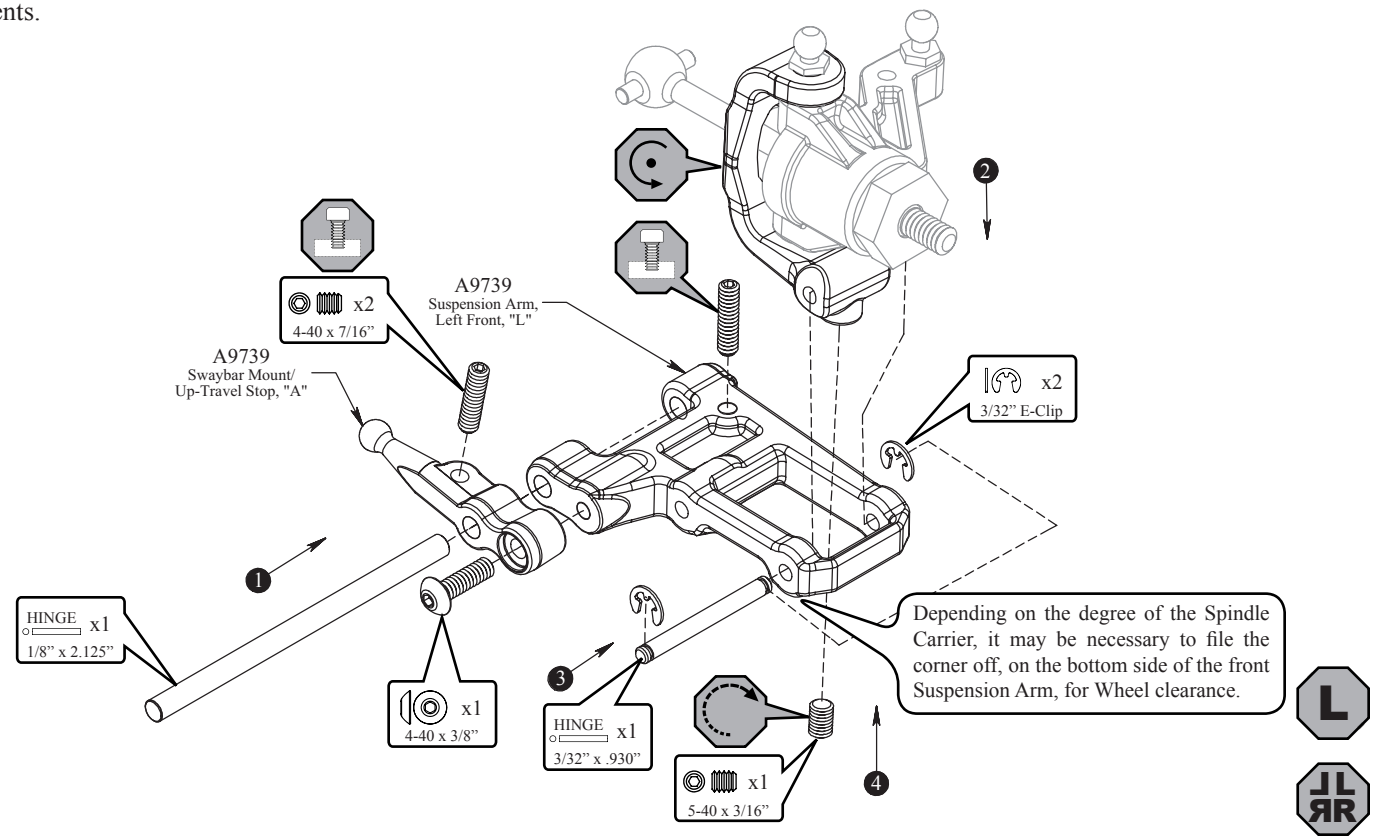

❑ STEP C-03 Front Shock Tower Assembly

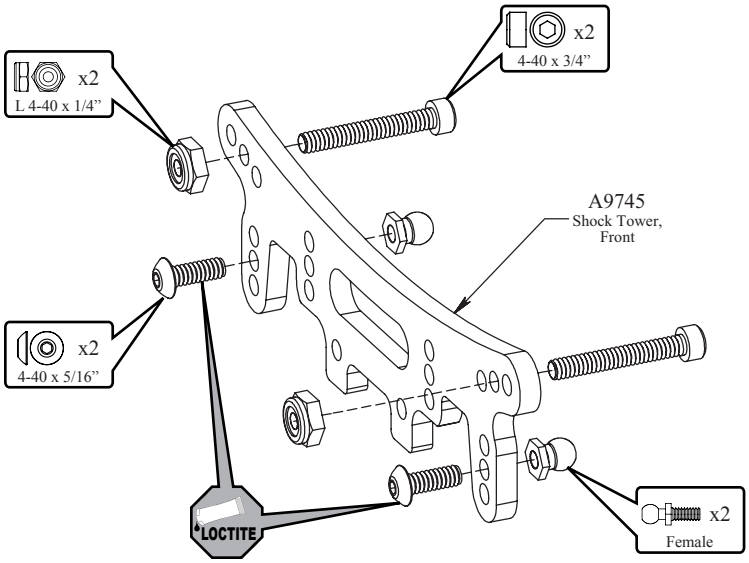

❑ STEP C-04 Front Suspension Installation

- Be sure to install the Locating Pin Screws before attaching the Pivot Blocks to the Chassis.
- Install each Locating Pin Screw so that the threads do not protrude from the bottom of the part, but the smooth portion does.

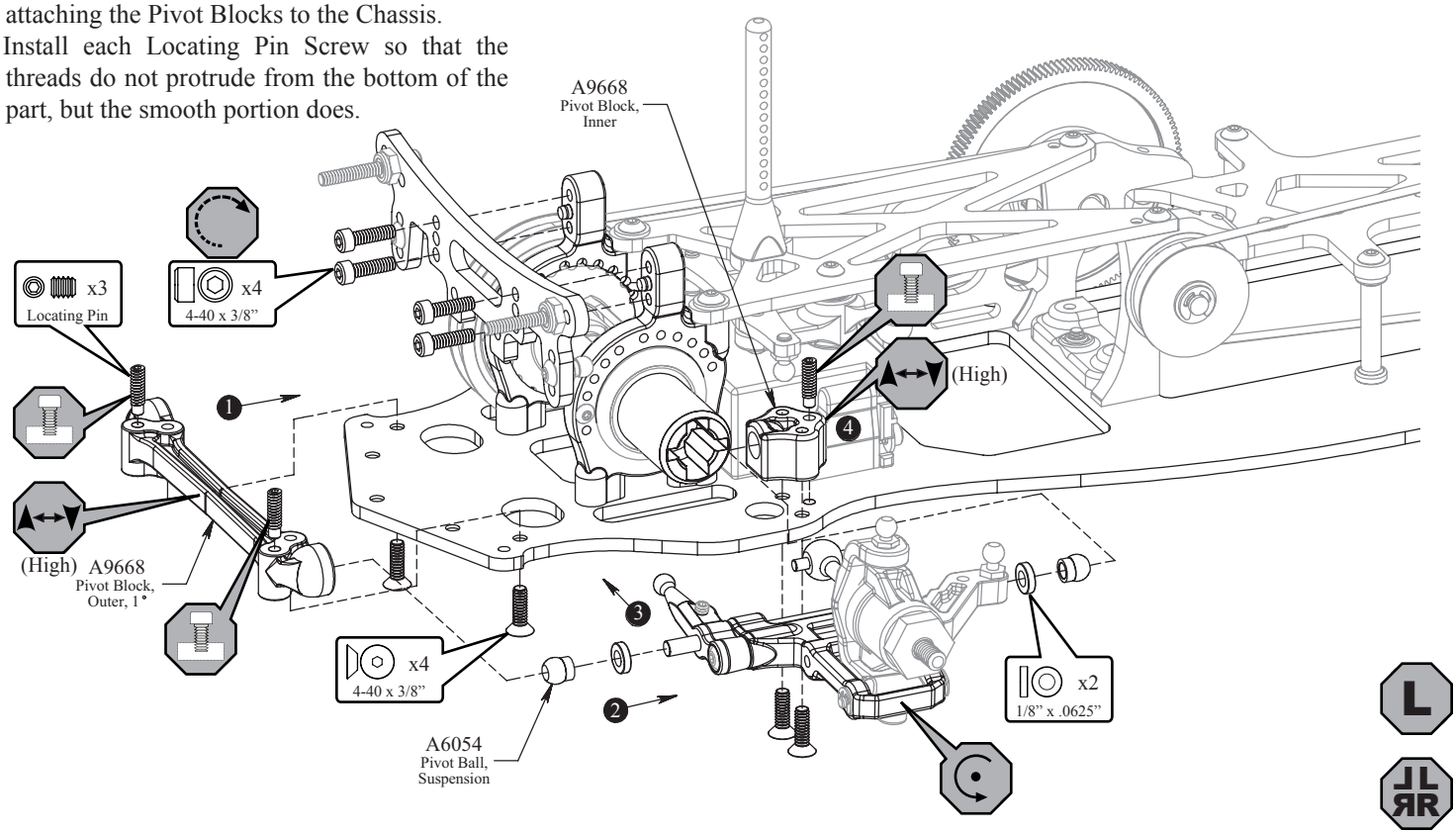

❑ STEP C-05 — *Tierod Assembly and Installation*

- Use the Team Losi flat wrench to hold the Turnbuckle while installing the short Rod Ends.
- Be sure to install the assembled Tierod onto the car with the chamfer (beveled portion of the square) on the driver's right side for easier adjustment later.

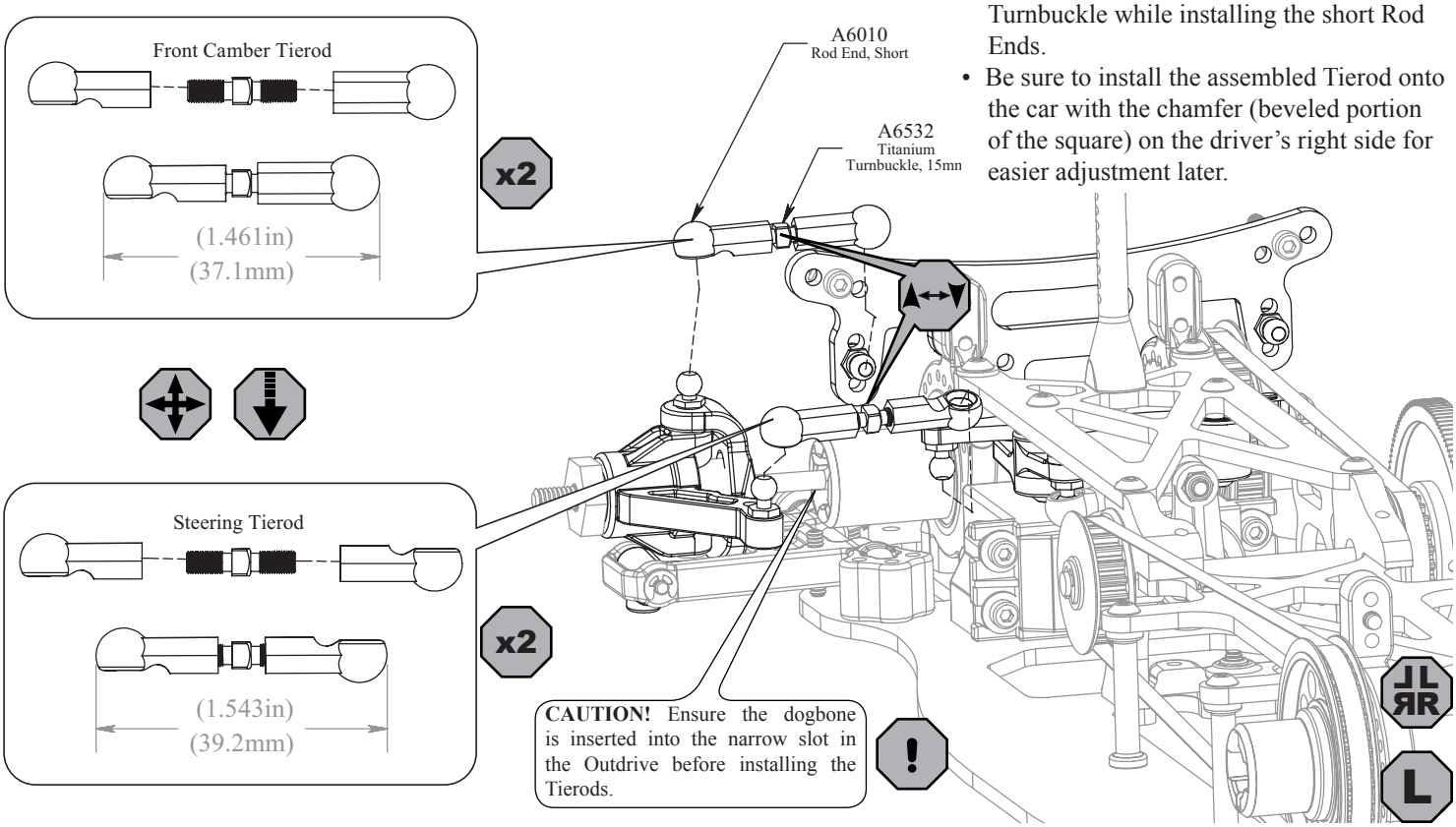

❑ STEP C-06 — *Bag C Completed Assembly*

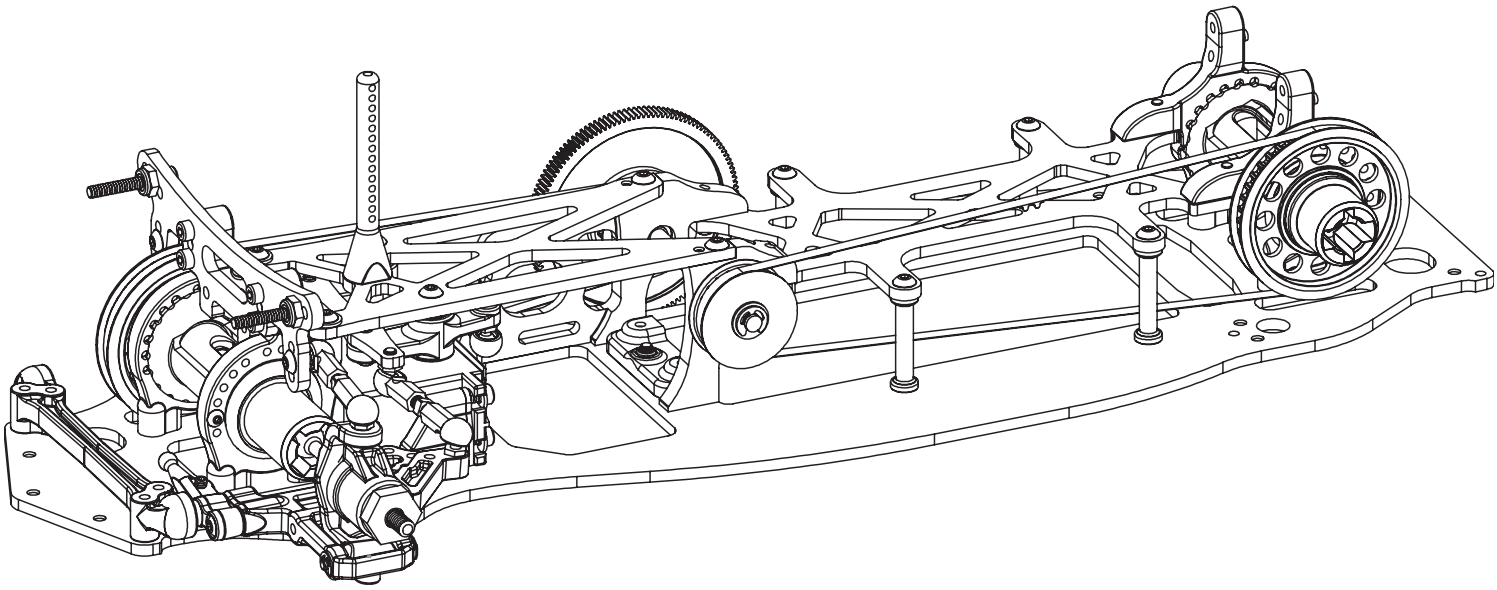

❑ STEP D-01 — CVD and Hub Assembly

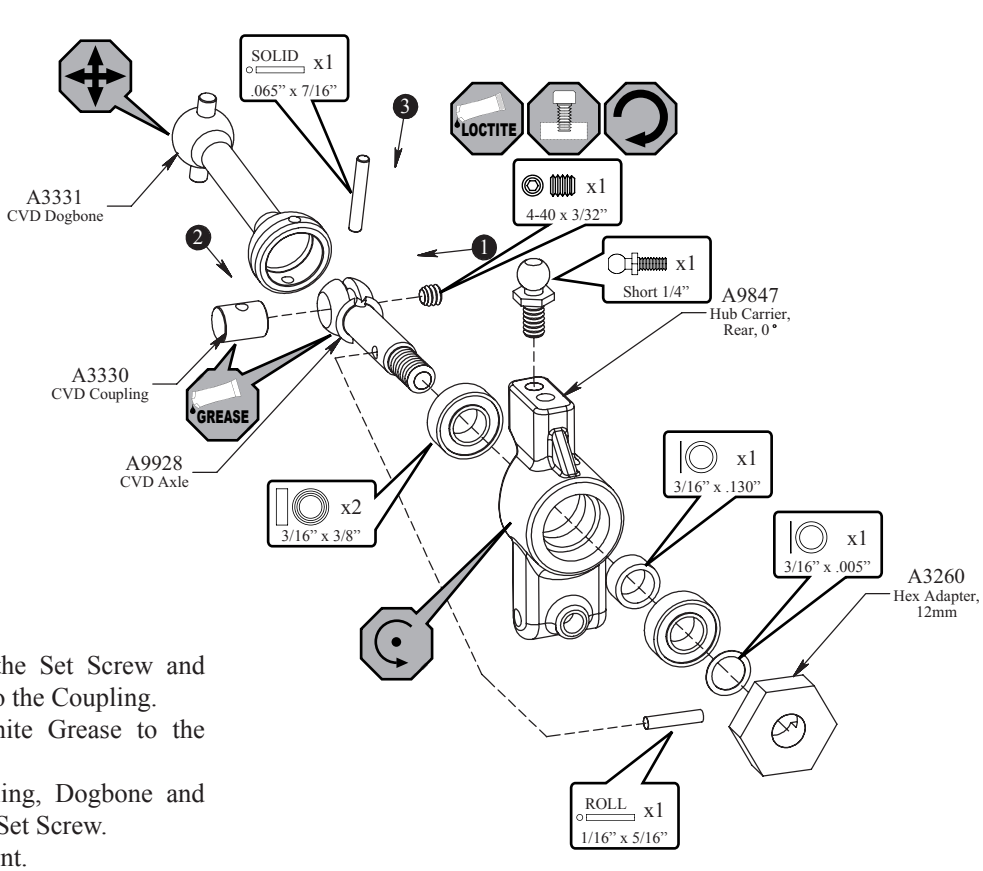

- Apply Loctite® to the Set Screw and partially thread it into the Coupling.
- Apply Synthetic White Grease to the Axle and Coupling.
- Assemble the Coupling, Dogbone and Pin, then tighten the Set Screw.
- Ensure Free Movement.

❑ STEP D-02 — Rear Arm Assembly

- See Setup Guide for Droop and Up-Travel adjustments.

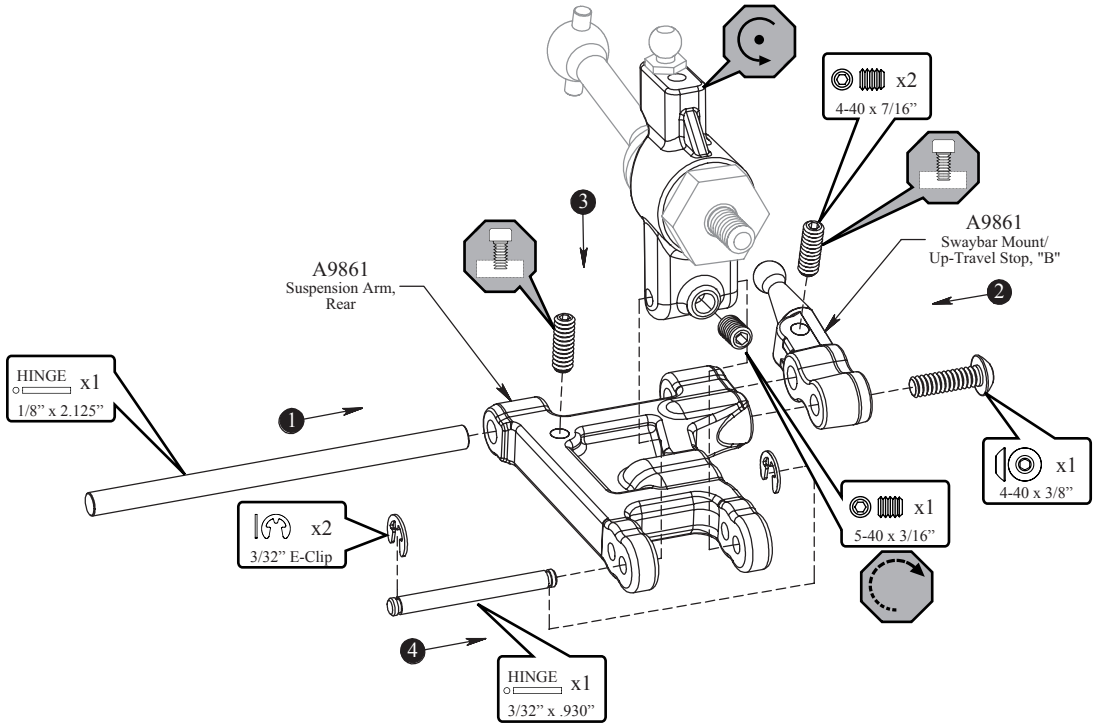

❑ STEP D-03 Rear Shock Tower Assembly

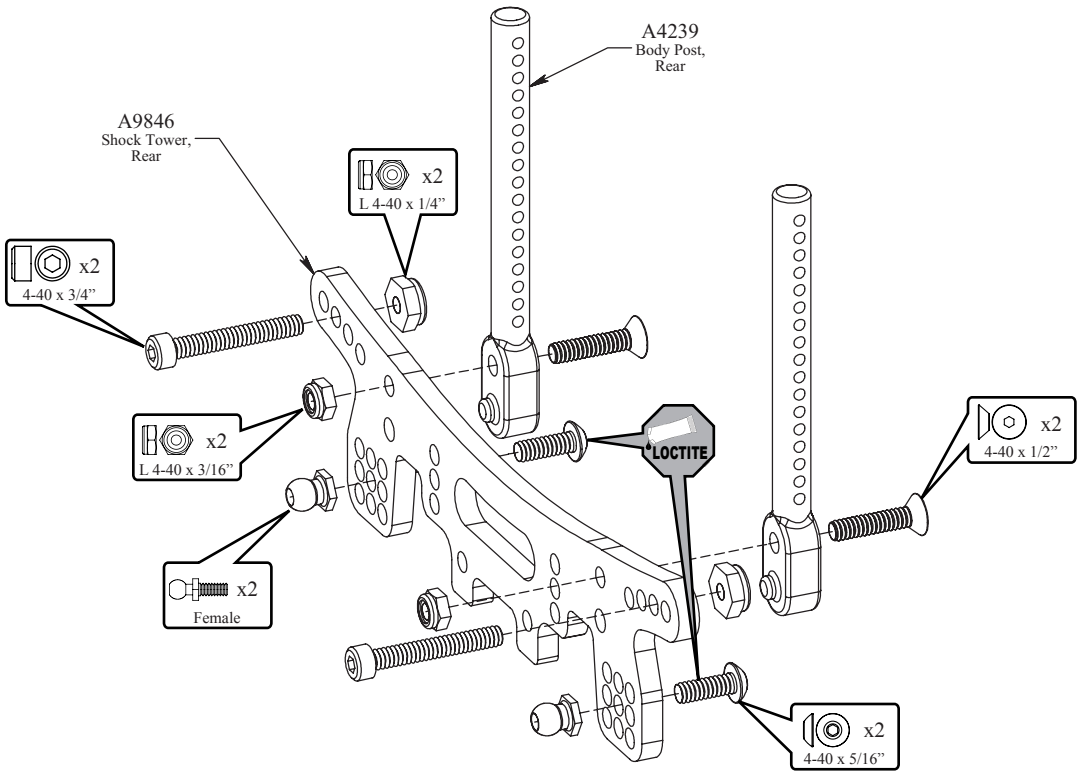

❑ STEP D-04 Rear Suspension Installation

- Be sure to install the Locating Pin Screws before attaching the Pivot Blocks to the Chassis.
- Install each Locating Pin Screw so that the threads do not protrude from the bottom of the part, but the smooth portion does.

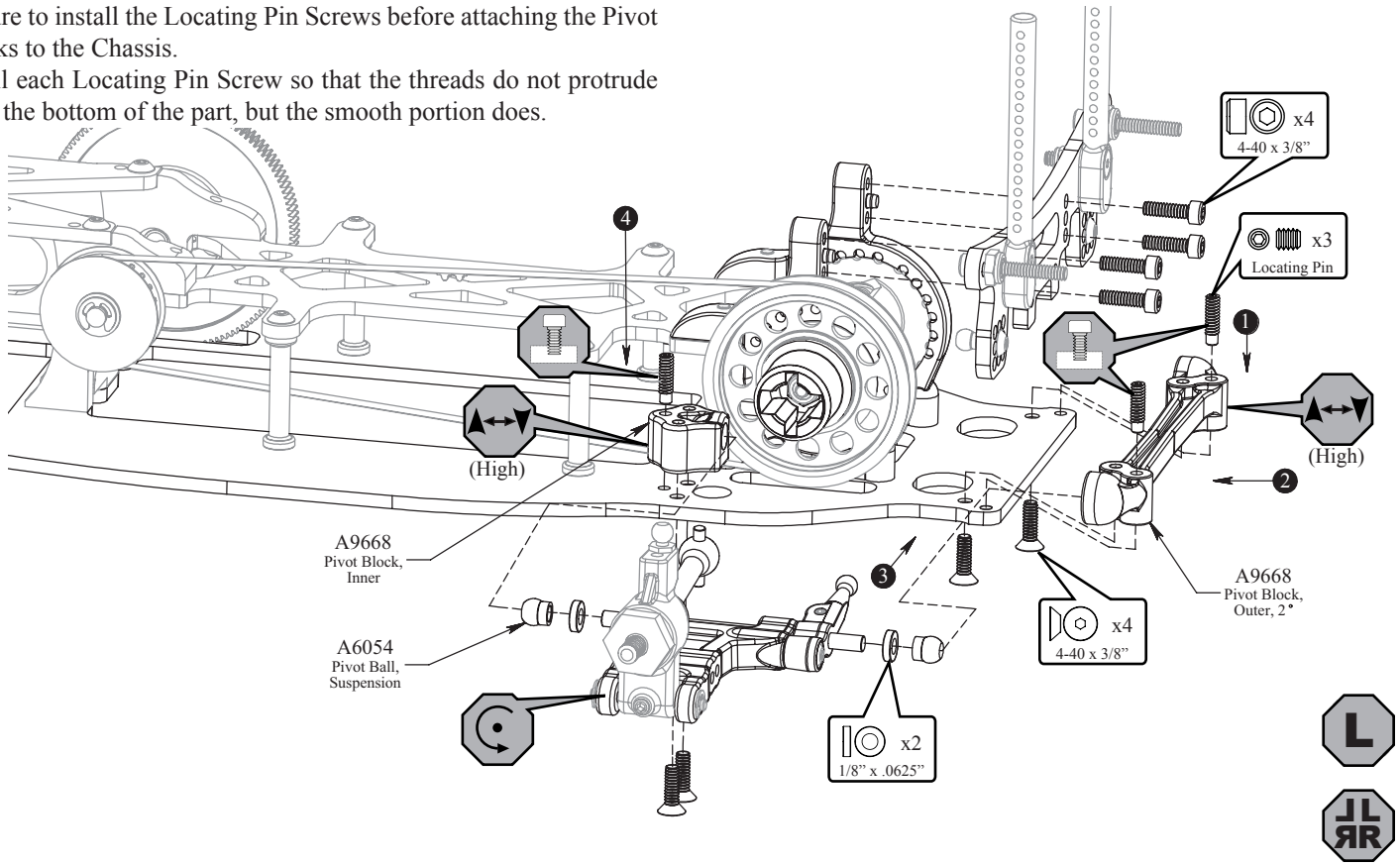

❑ STEP D-05 — *Tierod Assembly and Installation*

- Use the Team Losi flat wrench to hold the Turnbuckle while installing the short Rod Ends.
- Be sure to install the assembled Tierod onto the car with the chamfer (beveled portion of the square) on the driver's right side for easier adjustment later.

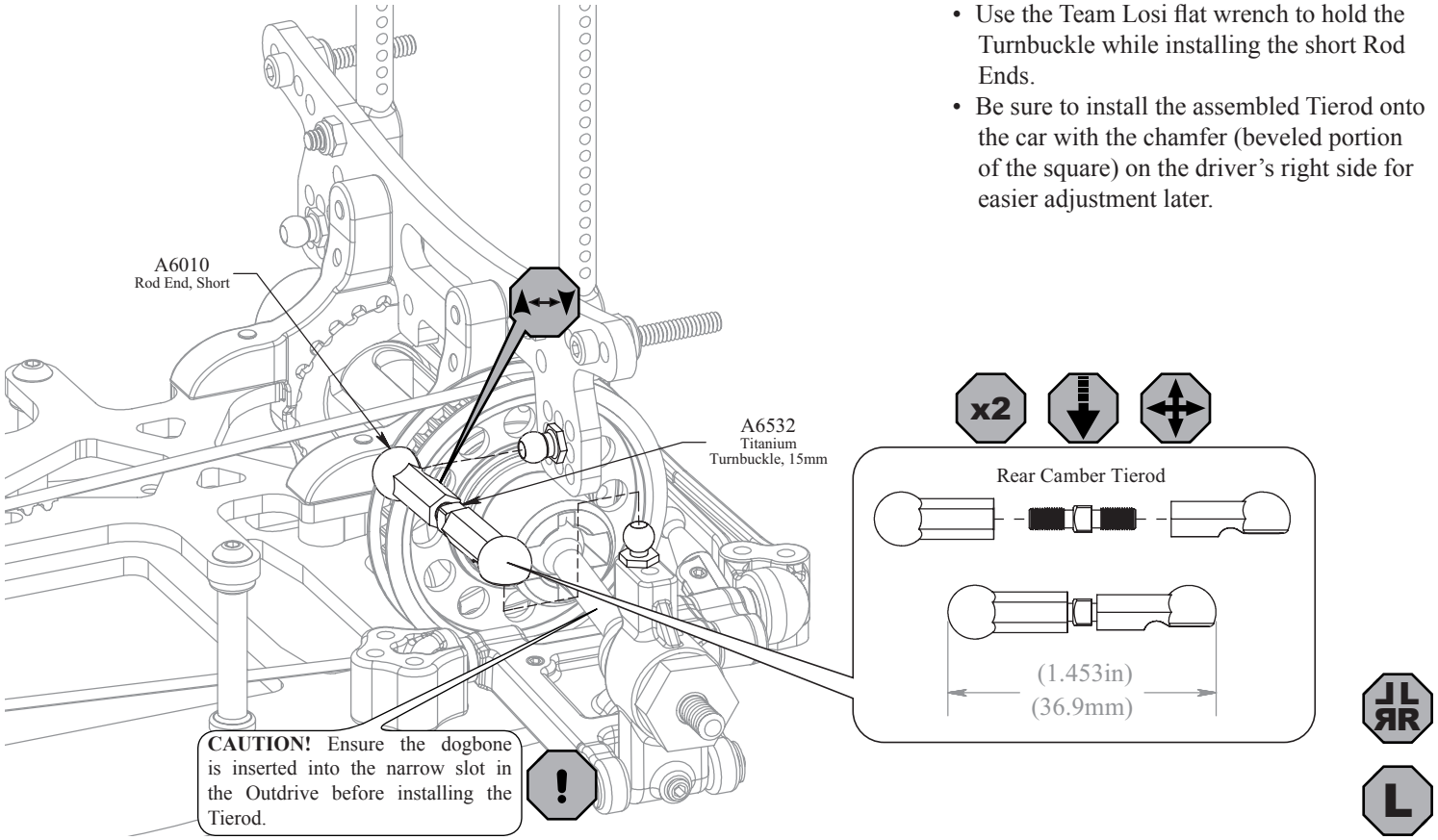

❑ STEP D-06 — *Bag C Completed Assembly*

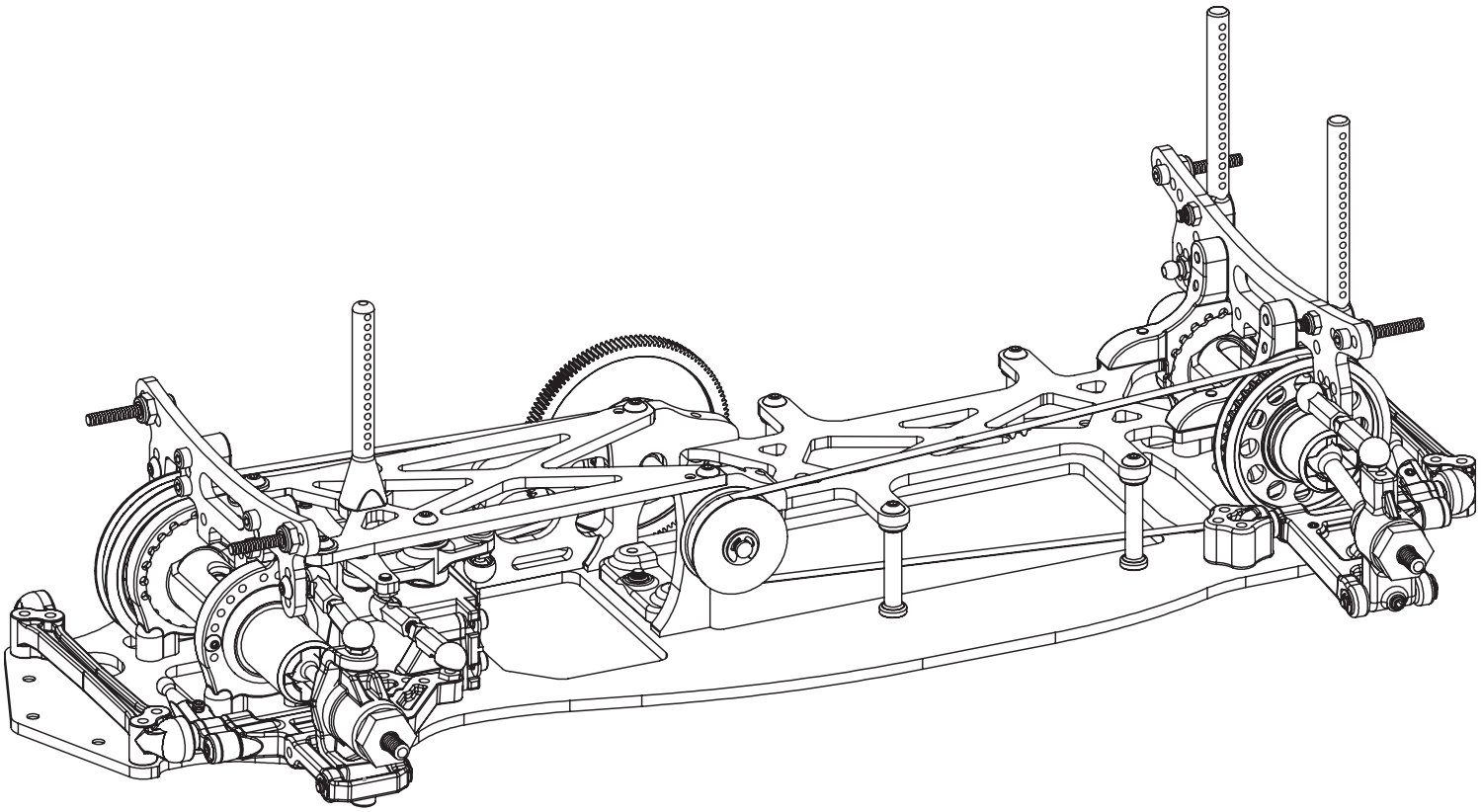

❑ STEP E-01 — Shock Assembly

- Thread the 2-56 x 5/16” Cap Head Screw into Shock Shaft using a 5/64” (or 2mm) Allen wrench.
- Thread the Shaft into the Shock End (using the 2-56 Cap Head Screw) until the edge on the Shaft (between the smooth and threaded sections) meets with the edge of the Shock end. Now, holding the Shaft and Screw, turn the Shock End an additional 2.5 rotations. Usually it is best to use half-rotation increments (**DO NOT THREAD IT ON MORE THAN THIS**). Remove the Cap Head Screw.
- Place a drop of Shock Oil onto the end of the Shaft with the hole in it and slide it through the assembled Shock Body as shown.
- Install the Piston using the 2-56 x 1/4” Button Head Screw.
- Install the Shock Adjustment Nut O-ring into the Shock Adjustment Nut before installing the Nut onto the Shock Body.

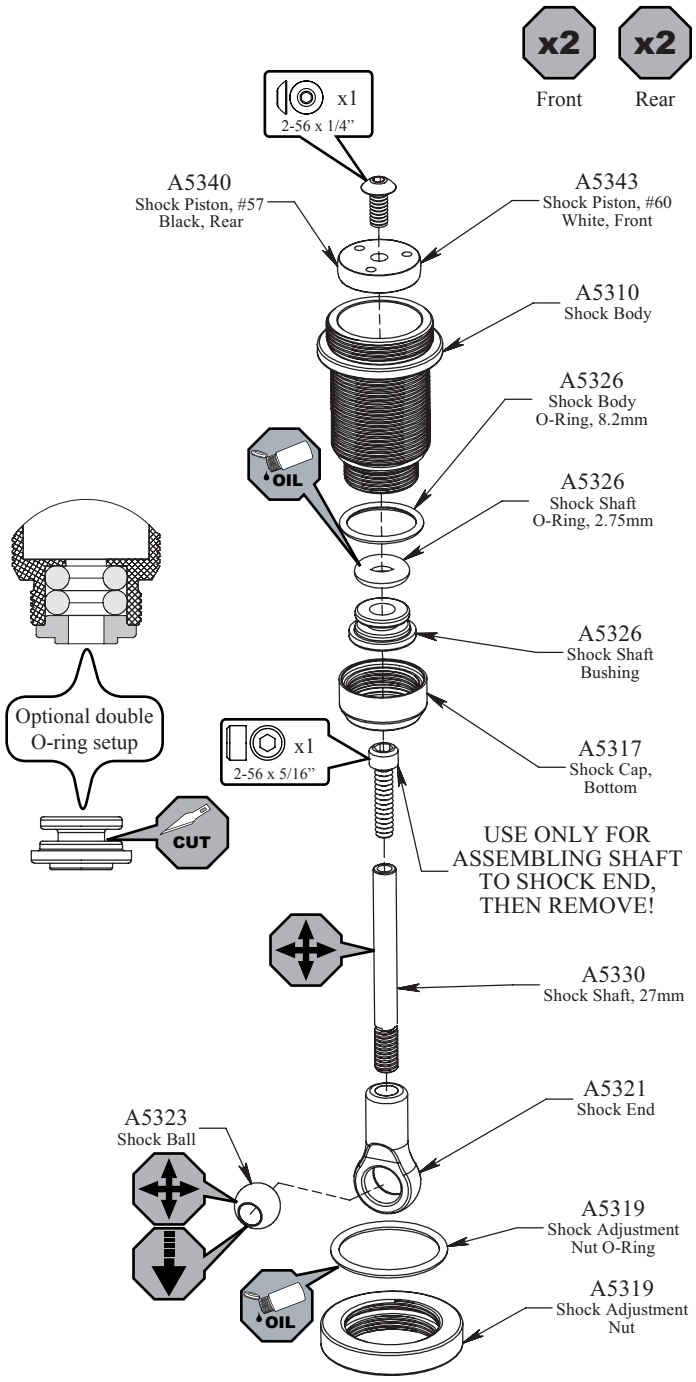

❑ STEP E-02 — Final Shock Assembly

- Ensure the Shaft is fully extended when filling the Shock.
- Fill the Shock Body with 40wt. Shock Oil until the Oil is approximately 1/16” from the top of the Body.
- “Work” the Shock Shaft up and down a few times. This will release the air bubbles trapped beneath the Piston. Place the filled Shock, in the upright position, off to the side for a few minutes until the air bubbles escape from the Oil.
- Once all the air bubbles are out of the Oil, gently place the Shock Bladder onto the Shock as shown. Some Oil should “bleed” from the Shock.
- Place the plastic Shock Top into the Shock Cap (top) (NOTE: There are two Shock Tops, use two dots to designate left side shocks and one dot to designate right side shocks.
- Screw the Shock Cap onto the Body until some resistance is felt.
- Slowly push the Shock Shaft up. This will bleed excess Oil from the Shock.
- Tighten the cap all the way down **by hand.**
- Move the Shock Shaft up and down. The Shaft should be easy to push up into the Body of the Shock. If increased pressure is felt towards the top, there is to much oil in the Shock. Loosen the Shock Cap and “bleed” the Shock as done previously.
- Make sure each pair (front/rear) Shocks have the same rebound and compression. This is checked by holding one Shock in each hand horizontally and pushing them together by the Shock End. Watch carefully to ensure that both compress evenly. Now release both Shocks and again watch carefully as they should rebound the same.
- If there are differences, adjust the Shocks with the amount of Oil, either adding or bleeding (**THERE SHOULD BE NO AIR IN THE SHOCK WHEN COMPLETE**).

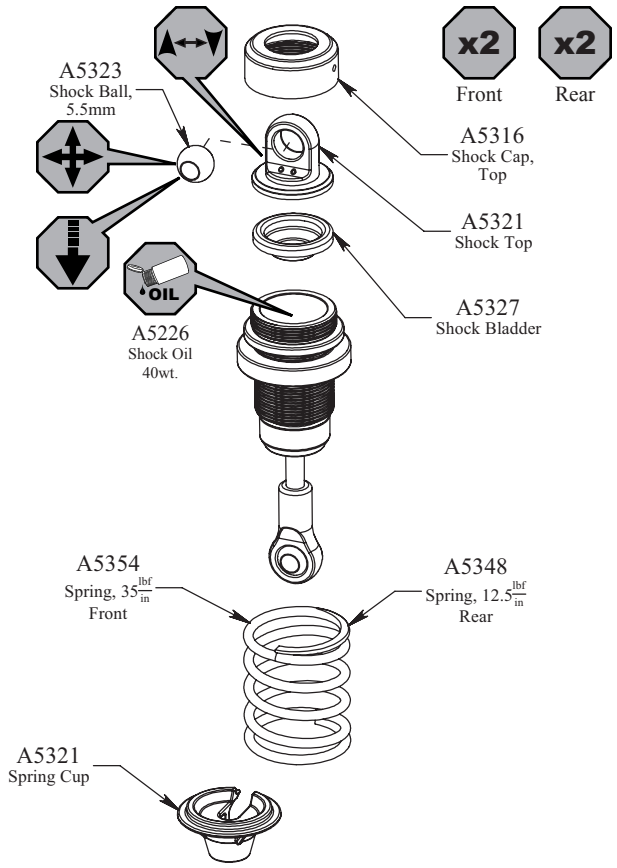

❑ STEP E-03 *Front Shock Installation*

- Recall: Place shocks containing two dots, on the cap, on the left side of the car, and the shocks containing one dot, on the cap, on the right side of the car.

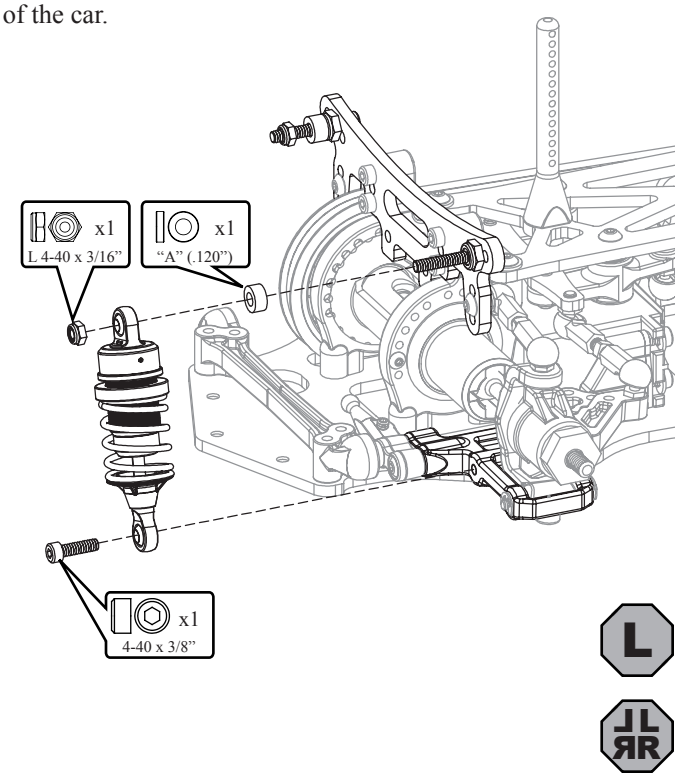

❑ STEP E-04 *Rear Shock Installation*

- Recall: Place shocks containing two dots, on the cap, on the left side of the car, and the shocks containing one dot, on the cap, on the right side of the car.

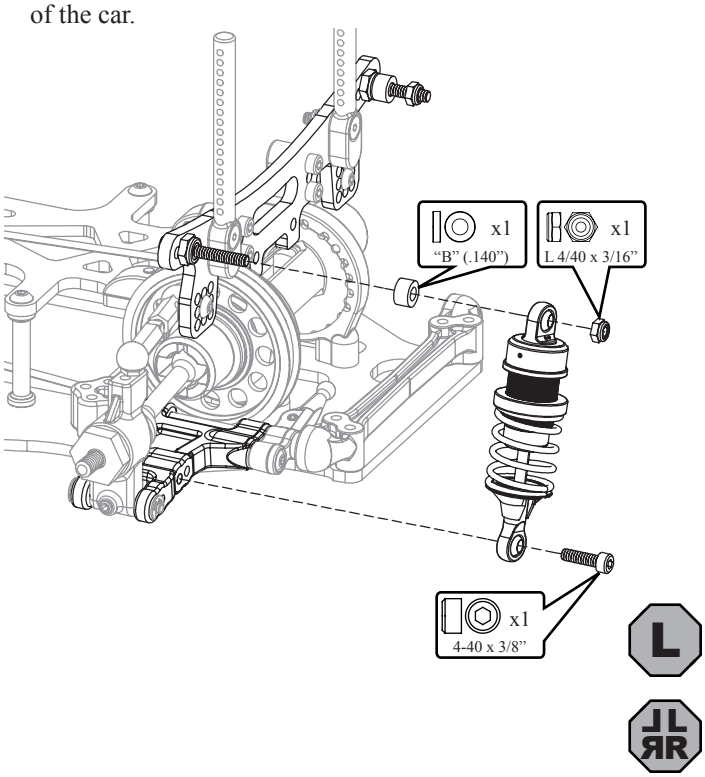

❑ STEP E-05 *Bag E Completed Assembly*